Switch Specifications and Adjustment Instructions for Models KLCE-DPDT / KES-DPDT

CLASS I, DIV. 1 & 2, GRPS. B,C,D; T-CODE T5 C US

0344

II 2 G Ex d IIB+H_2 T5 Gb (-35° C ≤ Tamb ≤ +85° C)

KEMA 07ATEX0129X

Certification Standards: EN 60079-0 : 2009 ● EN 60079-1 : 2007 ● CSA C22.2 No. 14-05 ● CSA C22.2 No. 30-M1986 ● UL 508 (17th Ed.) ● UL 1203 (4th Ed.)

Switch Contact Ratings: 15A, 125/250/480 VAC ● 1/8 HP, 125 VAC ● 1/4 HP, 250 VAC ● 1/2A, 125 VDC ● 1/4A, 250 VDC

Switch Circuitry: Double-Pole Double-Throw

Switch Wiring Note: Use cable and wiring suitable for temperatures up to 10° C (18° F) above the maximum ambient temperature. For cable connections within the EU, cable glands shall be ATEX certified for type "d" flameproof enclosures.

Switch Setting: Internal float mechanically actuates a switch lever push rod to provide a low level switch signal. Switch is factory set for normal operation when oil level is at the centerline of the controller housing sight window. Switch changes state (trips) when oil level drops 3/4" below the centerline of the controller housing sight window. (Note: Factory set switch trip point is based on using SAE 30 wt. oil at ambient temperature).

Switch Adjustment Instructions:

1. Ensure that switch circuit is not energized.
2. Loosen switch enclosure cover securement setscrew.
3. Remove switch enclosure cover.
4. Loosen switch adjustment nuts "A" and "B".
5. Turn switch adjustment screw "C" clockwise to lower the switch trip point.
6. Turn switch adjustment screw "C" counterclockwise to raise the switch trip point.
7. After adjustment, tighten nuts "A" and "B", reinstall cover and tighten setscrew.

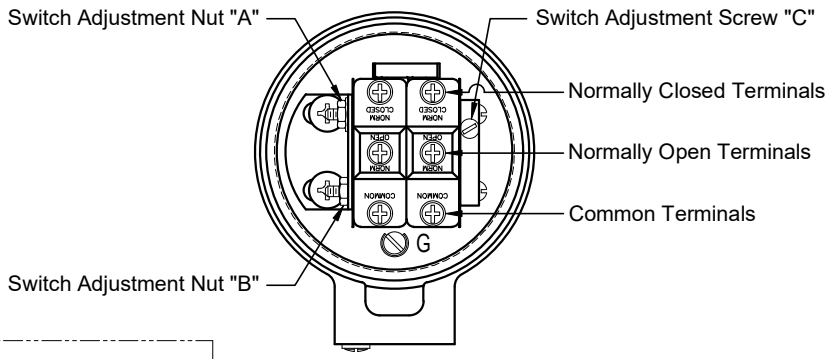

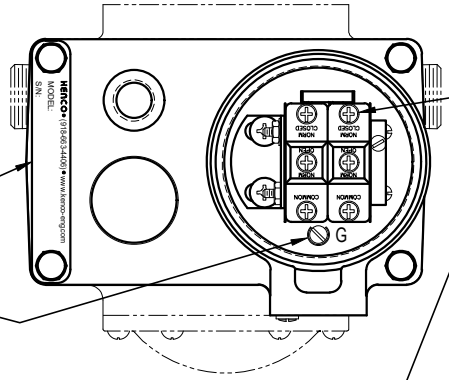

Identification Plate with Kenco Model Number and Serial Number stamped into surface.
Note:
Date of Manufacture is incorporated into Serial Number as follows:
"Month-Day-Year-Sequential Number"
(Example: 06-18-08-001)

6-32UNC Binding Head Ground Terminal Screw with Cup Washer

6-32UNC Binding Head Switch Terminal Screws with Cup Washer

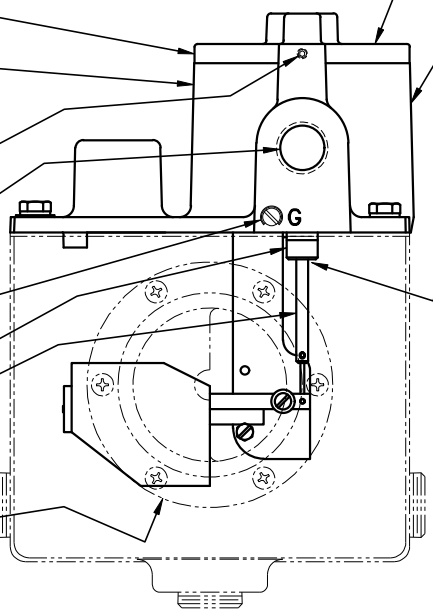

Switch Enclosure Cover

Switch Enclosure Base

M4 x 0.7 Hex Socket Cup Point Switch Enclosure Cover Securement Setscrew

1/2" NPT Switch Conduit Connection

6-32UNC Binding Head Ground Terminal Screw with Cup Washer

Switch Lever Push Rod Guide

Switch Lever Push Rod

Controller Housing Sight Window

Special Conditions for Safe Use Notes:

- For this device and it's rating, EN 60079-1 calls for a maximum diametrical clearance gap of 0.15 mm for cylindrical joints, but the gap between the Switch Lever Push Rod and the Switch Lever Push Rod Guide is specified by Kenco to be 0.076 mm. Therefore, the gap between the Switch Lever Push Rod and Switch Lever Push Rod Guide must not exceed 0.076 mm.
- For this device and it's rating, EN 60079-1 calls for a minimum thread engagement of 5 full threads, but the minimum thread engagement between the Switch Enclosure Cover and Switch Enclosure Base is specified by Kenco to be 10 threads. Therefore, the minimum thread engagement between the Switch Enclosure Cover and Switch Enclosure Base must be 10 threads minimum.
- For this device and it's rating, EN 60079-1 calls for a minimum thread engagement of 5 full threads, but the minimum thread engagement between the Switch Lever Push Rod Guide and Switch Enclosure Base is specified by Kenco to be 12 threads. Therefore, the minimum thread engagement between the Switch Lever Push Rod Guide and Switch Enclosure Base must be 12 threads minimum.

Note:
Since this sheet pertains to switch specifications only, the oil inlet valve and float details that relate to oil controller are not shown.

AGENCY CONTROLLED DOCUMENT

KENCO ENGINEERING

P.O. Box 470426 --- Tulsa, Oklahoma 74147
Phone: 918-663-4406 --- Fax.: 918-663-4480
www.kenco-eng.com --- E-mail: info@kenco-eng.com

10001 East 54th Street
Tulsa, Oklahoma 74146 USA
Phone: (918) 663-4406 • Fax: (918) 663-4480
Web site: http://www.kenco-eng.com • e-mail: info@kenco-eng.com

EU-Declaration of Conformity

This is to declare that the following equipment conforms to the provisions of the European Directive 2014/34/EU (the "Atex" directive) for use in potentially explosive atmospheres:

Oil Level Controllers/Switches, Models KLCE, KES, KLCE-DPDT, KES-DPDT, KHL, KHL-ES, KHL-DPDT, KHL-ES-DPDT, KSHL, KSHL-ES, KSLL and KSLL-ES

Equipment group and category, type(s) of protection, gas group and temperature classification:

Ex II 2 G Ex d IIB + H_2 T5 Gb

EU-Type Examination Certificate:

Certificate Number: KEMA 07ATEX0129X

Issued by: DEKRA Certification B.V. (Notified Body Number 0344)
Meander 1051, 6825 MJ Arnhem, The Netherlands

Standards used for Certification Purposes:

EN IEC 60079-0:2009 General Requirements
EN IEC 60079-1:2007 Flameproof Enclosures 'd'

Harmonized Standards:

EN IEC 60079-0:2018 General Requirements
EN IEC 60079-1:2014 Flameproof Enclosures 'd'

Note: The revised and now harmonized standards have been compared to the standards used for certification purposes and no changes in the state of the art apply to the equipment.

Compliance with Other Standards and/or Technical Specifications:

CSA C22.2 No. 14-05	Industrial Control Equipment
CSA C22.2 No. 30-M1986	Explosion-Proof Enclosures for Use in Class 1 Hazardous Locations
UL 508 (17th Edition)	Industrial Control Equipment
UL 1203 (4th Edition)	Explosion-Proof and Dust-Ignition-Proof Electrical Equipment for Use in Hazardous (Classified) Locations

The products described above comply with the essential requirements of the directives specified.

Signed: David Ragland

(David B. Ragland)

KENCO ENGINEERING COMPANY CORPORATE SEAL KENCO OKLAHOMA

Authority: President
Date: October 21st, 2024

A-55114 (Rev. K)

KENCO ENGINEERING COMPANY

P.O. BOX 470426 ● TULSA, OK 74147-0426
PHONE: (918) 663-4406 ● FAX: (918) 663-4480
www.kenco-eng.com ● e-mail: info@kenco-eng.com

INSTALLATION INSTRUCTIONS FOR MODEL KLC
OIL LEVEL CONTROLLERS WITH ADAPTERS (INCLUDING HIGH PRESSURE MODELS)

Note: For fire safe oil level controllers, see additional instructions in this work sheet covering installation of fire safe valves.

I. INSTALLATION AND MAINTENANCE INSTRUCTIONS FOR OIL INLET VALVE:

- **Connect the oil supply line to the oil inlet on the oil level controller. The minimum recommended supply line is ¾" I.D. The supply line must be clean and it is recommended that it be flushed with solvent before installation.**
- **Connect the oil supply line to the oil supply tank. If there is no existing valve at the tank or the existing supply outlet, a shut-off valve should be placed in the line to prevent oil loss when cleaning the controller inlet screen or filter.**
- **For HP-A high pressure models, pressure range must be between 10 psig and 35 psig. For HP-B high pressure models, pressure range must be between 36 psig and 70 psig.**
- **The oil inlet valve is set to maintain the oil level at the center of the sight glass when oil inlet pressure is at midrange. Low or high levels are often caused by two problems:**
  1. **Excessive oil inlet pressure, which will cause the unit to overfill.**
  2. **Improper equalizing lines between the crankcase and the controller will also result in improper levels.**

Note: Low pressure models require a minimum of 2' of oil inlet head pressure and a maximum of 25' of oil inlet head pressure.

II. INSTALLATION INSTRUCTIONS FOR UNITS WITH ADAPTERS:

OIL LEVEL CONTROLLERS WITH –9 (Universal adapter), -10 (Slotted universal adapter), -12 (Post mounted adapter) AND –FS OPTIONS

- **Attach the controller to the mounting adapter using the Kenco supplied bolts (and washers if applicable). The recommended torque for the bolts is 20 ft-lbs.**
- **Mount the controller so that the centerline of the sight window corresponds to the running oil level in the crankcase. Connect the hose from the ¾" outlet of the controller to the crankcase. NOTE: The outlet port on the oil level controller must be located below the oil level in the crankcase.**
- **An equalizing line must be used between the controller and crankcase in order to equalize the pressure. The tubing must be a minimum of 3/8" I.D. and must be kept under 2 feet. DO NOT loop this line. It must be trap free and self draining with a downward pitch flow by gravity.**

FIGURE 1: MOUNTING EXAMPLE OF -9 ADAPTER

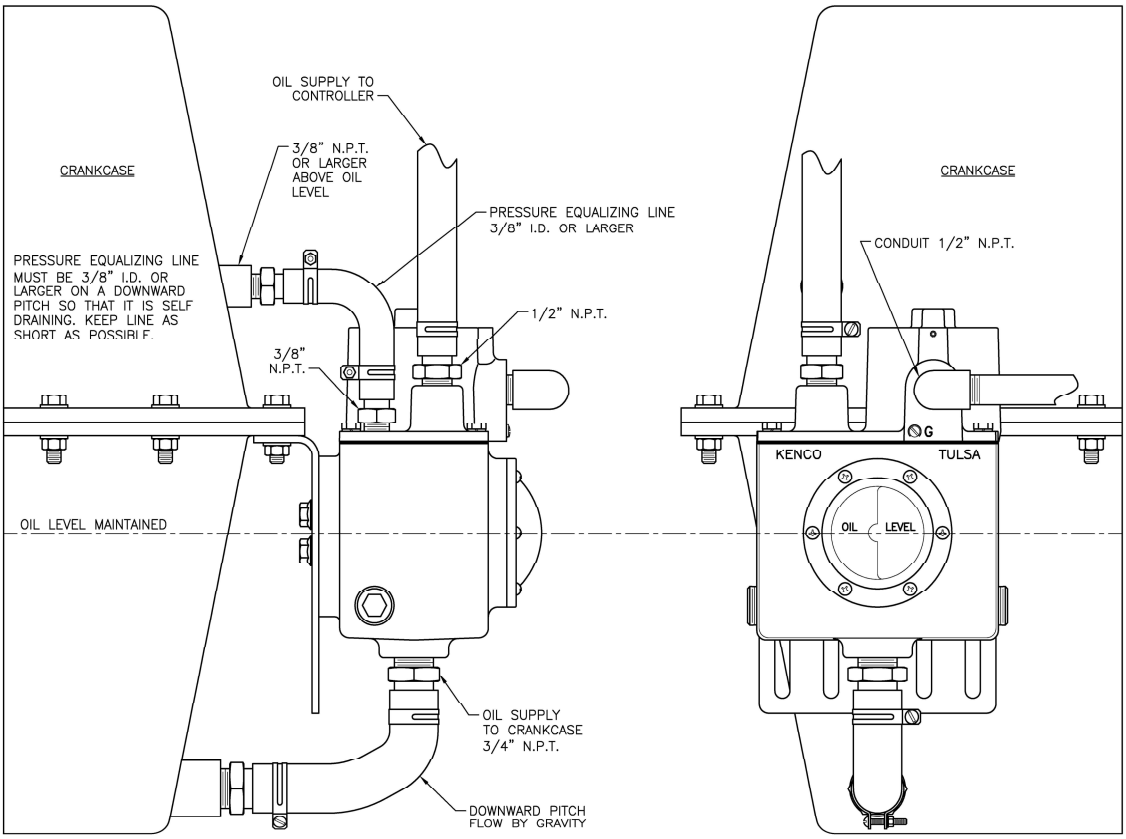

FIGURE 2: MECHANICAL LUBRICATOR –11 AND –11-FS OPTION

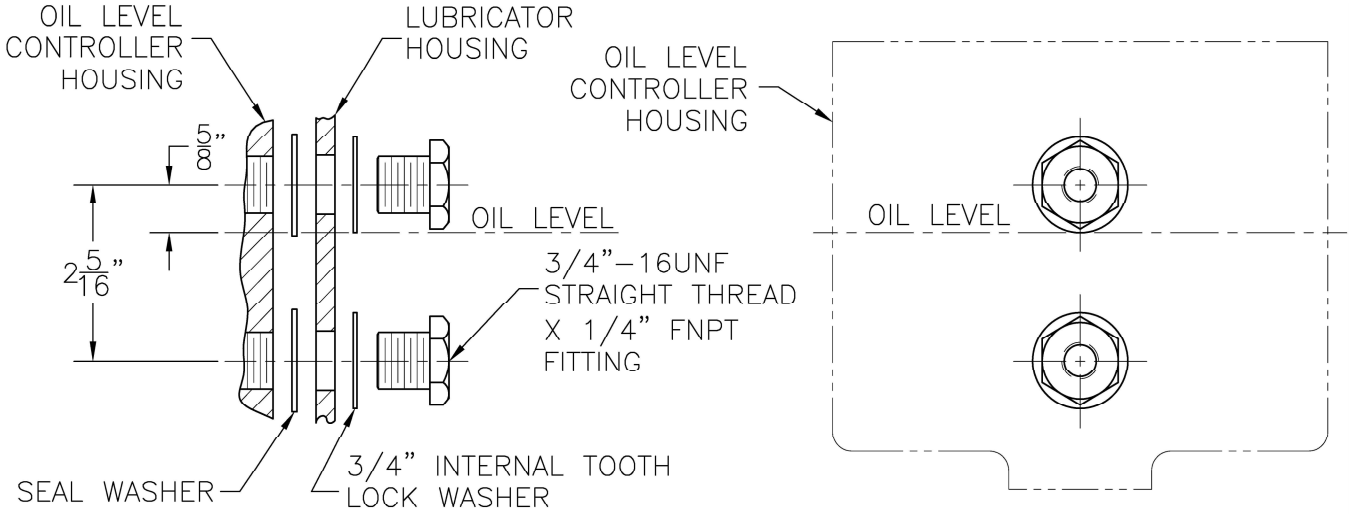

(Drill 25/32"Ø holes in lubricator housing to mount)

- **Drill holes in the lubricator housing as shown and mount the controller with the inlet located on the top side using the seal washers and mounting bolts provided.**
- **Place the seal washers between the controller and the lubricator housing.**

OIL LEVEL CONTROLLER WITH –14 AND –14 –FS OPTION (Cooper Superior)-Formerly White

- **Remove the triangular blind flange located on the compressor and mount the controller assembly in its place.**

OIL LEVEL CONTROLLER WITH -24 (Ariel Compressor JGE, JGH, JGK, JGR, JGT & JGW), -25 (Ariel Compressor JGU 2/4/6 cylinder, JGZ 2/4/6 cylinder, KBB 4/6 cylinder, KBV 4/6 cylinder), -48A (Ariel Compressor JGB 4/6 cylinder, JGV 4/6 cylinder), -48B (Ariel Compressor JGC 4/6 cylinder & JGD 4/6 cylinder with standard shaft rotation and a single chain drive; JGC/JGD 6 cylinder with reverse shaft rotation and a dual chain drive), -48C (Ariel Compressor JGC 4/6 cylinder and JGD 4/6 cylinder with reverse shaft rotation and a single chain drive; JGC/JGD 6 cylinder with standard shaft rotation and a dual chain drive) AND –FS OPTIONS

- **Remove the sight glass located on the crankcase and replace it with the oil controller assembly using the sight glass mounting bolts and Kenco supplied gasket.**

OIL LEVEL CONTROLLERS WITH –1 (Clark MA & CFA) –2 (Clark HMB & TMP), -3 (Clark RA, HRA, HBA, HCA, HLA, TLA), -6 (Cooper-Bessemer GMW), -7 (Cooper-Bessemer GMV), -8 (Cooper-Bessemer GMX), -16, -16-R, -16-6.25 (Cooper-Bessemer BMV & 275) AND -FS OPTIONS

- **Remove the visual oil gauge assembly from the engine and replace it with the oil level controller and adapter assembly supplied with a gasket and mounting bolts when applicable.**

OIL LEVEL CONTROLLERS WITH –4 (Ingersoll-Rand SVG & KVS), -5 (Ingersoll-Rand KVG) AND -FS OPTIONS

- **Remove the visual oil gauge assembly from the engine and replace it with the oil level controller and adapter assembly supplied with a gasket and mounting bolts when applicable.**
- **If an equalizing line exists for the engine sight glass, detach the equalizing line from the sight glass and reattach it to the vent connection located at the top of the controller adapter.**

Note: It is important to insure that there are no loops in this line for it must be trap free and self draining.

OIL LEVEL CONTROLLER WITH –17 (Waukesha VHP Engines F2895, F3251, F5108, L5790 & L7042), -18 (-17 with 1618 Low Flow Meter), -27 (for newer 2-bolt door Waukesha engines same as –17), –37 (Waukesha P9390), -38 (same as –37 with 1618 Low Flow Meter), -39 (same as -37 with 14308 Low Flow Meter), -40 (same as -17 with 14308 Low Flow Meter), and –FS OPTIONS

- **Remove the cast aluminum inspection door from the engine. Remove the clamp bar from the old door.**
- **For -17, -18, -37, -38, -39, & -40, install the O-ring into the groove of the Kenco door and replace the clamp bar on the back side of the door using the bolts, washers, and O-rings supplied by Kenco.**
- **For –27, install the O-ring into the groove of the Kenco door and replace the clamp bar on the back side of the door using the two bolts and the seal washers supplied by Kenco.**
- **Place the controller assembly into the inspection port of the engine and tighten the bolt(s) down.**
- **Install oil inlet line into the controller oil valve or the meter inlet port.**
- **For models with a Low Flow Meter, refer to the additional instructions supplied with the 1618 or 14308 Kenco Low Flow meter.**

FIGURE 3: DOOR ASSEMBLY FOR –17, -18, -27, -37, -38, -39, -40

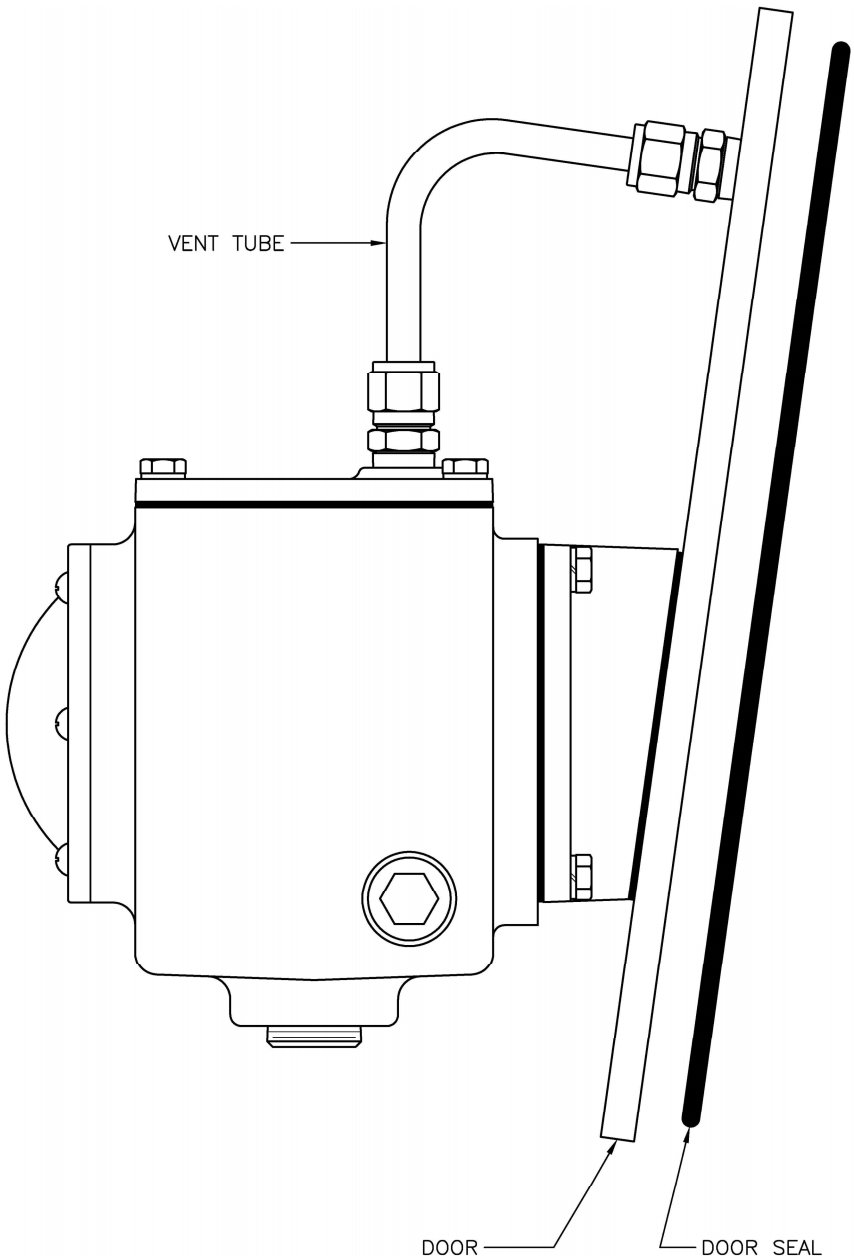

III. INSTALLATION INSTRUCTIONS FOR FIRE SAFE VALVES:

MODEL 50-KFS AND 75-KFS (PATENT NO. 3,877,476)

NOTE: All lines between thermal valves, supply tanks and the controller must be made of steel. DO NOT use rubber hose. The lines should be 3/4" I.D.

- **When installing the 50-KFS and 75-KFS, any orientation of the thermal fusing element is acceptable, but facing downward is preferred. This ensures that the fuse is directly exposed to the heat source in case of a fire.**
- **The 50-KFS valve has 1/2" FNPT threads and should be installed in the oil supply line as close to the controller as possible. Meters, filters and pressure regulators should be installed between the controller and the 50-KFS.**
- **The 75-KFS valve has 3/4" FNPT threads and should be located as close to the crankcase as possible and the oil outlet line should be a minimum 3/4" I.D. to insure adequate oil flow to the crankcase.**

NOTE: The 75-KFS valve is not required when using –FS adapters other than –9, -10 & –12.

FIGURE 4: FIRE SAFE VALVE INSTALLATION

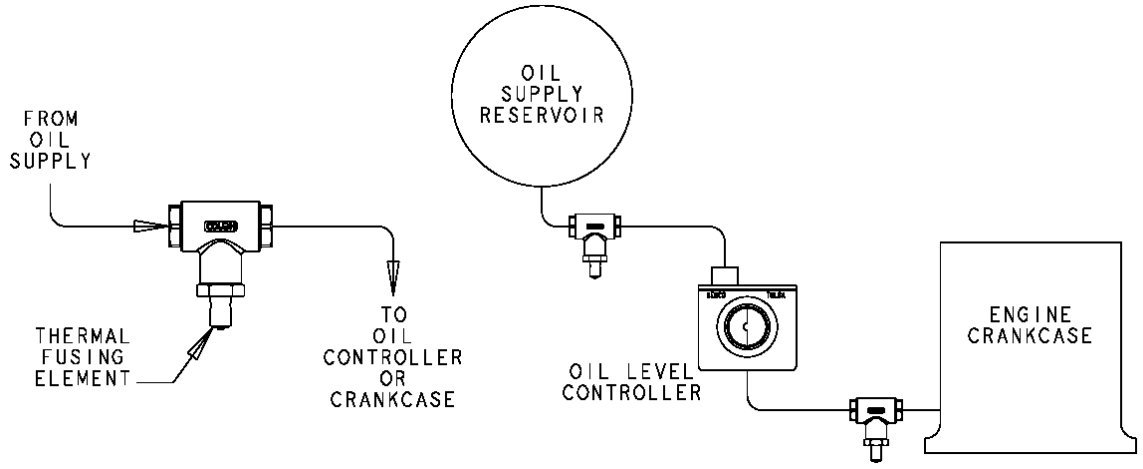

Note: Flow on the KFS valve is bidirectional. Either port can serve as the inlet or outlet.

IV. START-UP PROCEDURES

- **Flush the supply system and supply line with solvent to remove all burrs and construction debris.**
- **Insure that the oil supply tank is full.**
- **After the engine has been running for 1 hour, visually check the oil level in the sight glass. The oil level should be in the center of the sight glass depending on static head pressure.**
- **With the engine running, check the crankcase oil level. It should be the same as the oil level in the oil controller. If not, check the installation of the equalizing line (if applicable). See instruction for the equalizing line at –9.**
- **Check all piping connections for leaks and repair as needed.**

V .SIX MONTH SUGGESTED MAINTENANCE PLAN

Oil Valve Service

- **Close the oil supply valve and disconnect the oil inlet supply line.**
- **Place a pan under the controller to catch the oil from the oil supply line.**
- **Remove and clean the oil inlet valve screen.**
- **Once the screen is clean, reassemble and open the oil supply valve.**

Note: Dispose of oil in a proper container.