Switch Specifications and Adjustment Instructions for Models KHL / KHL-ES

CLASS I, DIV. 1 & 2, GRPS. B,C,D; T-CODE T5 C US

0344

II 2 G Ex d IIB+H_2 T5 Gb (-35° C ≤ Tamb ≤ +85° C)

KEMA 07ATEX0129X

Certification Standards: EN 60079-0 : 2009 ● EN 60079-1 : 2007 ● CSA C22.2 No. 14-05 ● CSA C22.2 No. 30-M1986 ● UL 508 (17th Ed.) ● UL 1203 (4th Ed.)

Switch Contact Ratings: 15A, 125/250/480 VAC ● 1/8 HP, 125 VAC ● 1/4 HP, 250 VAC ● 1/2A, 125 VDC ● 1/4A, 250 VDC

Switch Circuitry: Single-Pole Double-Throw

Switch Wiring Note: Use cable and wiring suitable for temperatures up to 10° C (18° F) above the maximum ambient temperature. For cable connections within the EU, cable glands shall be ATEX certified for type "d" flameproof enclosures.

Switch Setting: Internal float mechanically actuates a switch lever push rod to provide a high level and low level switch signal from the same switch. Switch is factory set for normal operation when oil level is at the centerline of the controller housing sight window. Switch changes state (trips) when oil level rises 3/4" above and drops 3/4" below the centerline of the controller housing sight window. (Note: Factory set switch trip points are based on using SAE 30 wt. oil at ambient temperature).

Switch Adjustment Instructions:

1. Ensure that switch circuit is not energized.
2. Loosen switch enclosure cover securement setscrew.
3. Remove switch enclosure cover.
4. Loosen switch adjustment nuts "A" and "B".
5. Turn switch adjustment screw "C" clockwise to lower the low level switch trip point and raise the high level switch trip point.
6. Turn switch adjustment screw "C" counterclockwise to raise the low level switch trip point and lower the high level switch trip point.
7. After adjustment, tighten nuts "A" and "B", reinstall cover and tighten setscrew.

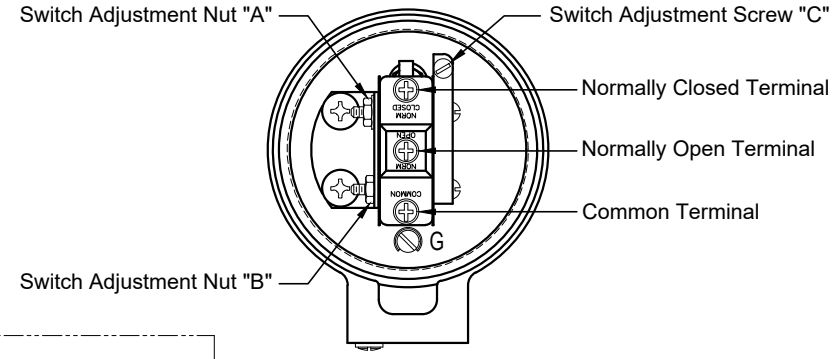

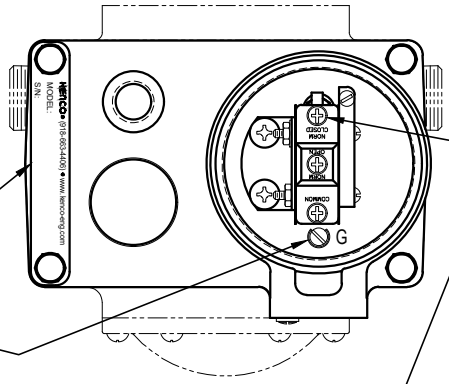

Identification Plate with Kenco Model Number and Serial Number stamped into surface.
Note:
Date of Manufacture is incorporated into Serial Number as follows: "Month-Day-Year-Sequential Number" (Example: 06-18-08-001)

6-32UNC Binding Head Ground Terminal Screw with Cup Washer

6-32UNC Binding Head Switch Terminal Screws with Cup Washer

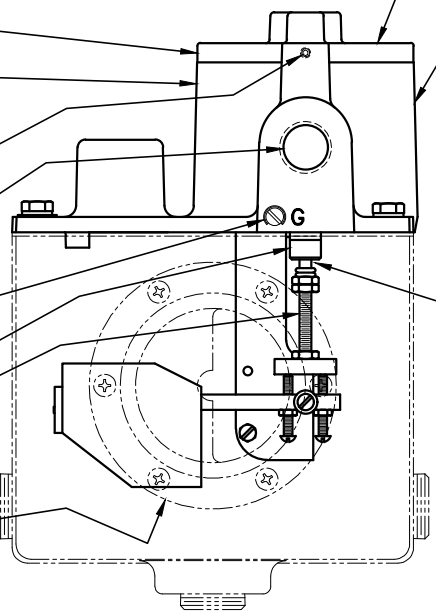

Switch Enclosure Cover

Switch Enclosure Base

M4 x 0.7 Hex Socket Cup Point Switch Enclosure Cover Securement Setscrew

1/2" NPT Switch Conduit Connection

6-32UNC Binding Head Ground Terminal Screw with Cup Washer

Switch Lever Push Rod Guide

Switch Lever Push Rod

Controller Housing Sight Window

Special Conditions for Safe Use Notes:

- For this device and it's rating, EN 60079-1 calls for a maximum diametrical clearance gap of 0.15 mm for cylindrical joints, but the gap between the Switch Lever Push Rod and the Switch Lever Push Rod Guide is specified by Kenco to be 0.076 mm. Therefore, the gap between the Switch Lever Push Rod and Switch Lever Push Rod Guide must not exceed 0.076 mm.
- For this device and it's rating, EN 60079-1 calls for a minimum thread engagement of 5 full threads, but the minimum thread engagement between the Switch Enclosure Cover and Switch Enclosure Base is specified by Kenco to be 10 threads. Therefore, the minimum thread engagement between the Switch Enclosure Cover and Switch Enclosure Base must be 10 threads minimum.
- For this device and it's rating, EN 60079-1 calls for a minimum thread engagement of 5 full threads, but the minimum thread engagement between the Switch Lever Push Rod Guide and Switch Enclosure Base is specified by Kenco to be 12 threads. Therefore, the minimum thread engagement between the Switch Lever Push Rod Guide and Switch Enclosure Base must be 12 threads minimum.

Note:
Since this sheet pertains to switch specifications only, the oil inlet valve and float details that relate to oil controller are not shown.

AGENCY CONTROLLED DOCUMENT

KENCO ENGINEERING

P.O. Box 470426 --- Tulsa, Oklahoma 74147
Phone: 918-663-4406 --- Fax.: 918-663-4480
www.kenco-eng.com --- E-mail: info@kenco-eng.com

A-53865
(Rev. D)
[01-29-08]

10001 East 54th Street
Tulsa, Oklahoma 74146 USA
Phone: (918) 663-4406 • Fax: (918) 663-4480
Web site: http://www.kenco-eng.com • e-mail: info@kenco-eng.com

EU-Declaration of Conformity

This is to declare that the following equipment conforms to the provisions of the European Directive 2014/34/EU (the "Atex" directive) for use in potentially explosive atmospheres:

Oil Level Controllers/Switches, Models KLCE, KES, KLCE-DPDT, KES-DPDT, KHL, KHL-ES, KHL-DPDT, KHL-ES-DPDT, KSHL, KSHL-ES, KSLL and KSLL-ES

Equipment group and category, type(s) of protection, gas group and temperature classification:

Ex II 2 G Ex d IIB + H_2 T5 Gb

EU-Type Examination Certificate:

Certificate Number: KEMA 07ATEX0129X

Issued by: DEKRA Certification B.V. (Notified Body Number 0344)
Meander 1051, 6825 MJ Arnhem, The Netherlands

Standards used for Certification Purposes:

EN IEC 60079-0:2009 General Requirements
EN IEC 60079-1:2007 Flameproof Enclosures 'd'

Harmonized Standards:

EN IEC 60079-0:2018 General Requirements
EN IEC 60079-1:2014 Flameproof Enclosures 'd'

Note: The revised and now harmonized standards have been compared to the standards used for certification purposes and no changes in the state of the art apply to the equipment.

Compliance with Other Standards and/or Technical Specifications:

CSA C22.2 No. 14-05	Industrial Control Equipment
CSA C22.2 No. 30-M1986	Explosion-Proof Enclosures for Use in Class 1 Hazardous Locations
UL 508 (17th Edition)	Industrial Control Equipment
UL 1203 (4th Edition)	Explosion-Proof and Dust-Ignition-Proof Electrical Equipment for Use in Hazardous (Classified) Locations

The products described above comply with the essential requirements of the directives specified.

Signed: David Ragland

(David B. Ragland)

KENCO ENGINEERING COMPANY CORPORATE SEAL KENCO OKLAHOMA

Authority: President
Date: October 21st, 2024

A-55114 (Rev. K)

P.O. BOX 470426 ● TULSA, OK 74147-0426
PHONE: (918) 663-4406 ● FAX: (918) 663-4480
www.kenco-eng.com ● e-mail: info@kenco-eng.com

INSTALLATION INSTRUCTIONS FOR KENCO MODEL KLC TYPE OIL CONTROLLERS WITH MOUNTING ADAPTERS

(See Section V for Instructions on Fire Safe Oil Controllers with 50-KFS and/or 75-KFS Fire Safe Valves.)

I. OIL CONTROLLER INSTALLATION AND MAINTENANCE INSTRUCTIONS:

- Connect an oil supply line to the 1/2" FNPT oil inlet port on top of the oil level controller. The minimum recommended supply line I.D. is 5/8". Note: The inside of the supply line must be clean.
- Connect the oil supply line to the oil supply tank. If there is no existing valve at the tank or the existing supply outlet, a shut-off valve should be placed in the line to prevent oil loss when cleaning the controller inlet screen or filter.
- Standard controller oil inlet pressure range must be between 2' and 25' of oil inlet head pressure (0.77 PSIG to 9.64 PSIG) unless unit is equipped with a high pressure HPA or HPB oil inlet orifice option.
  1. HPA oil inlet orifice pressure range must be between 10 PSIG and 35 PSIG.
  2. HPB oil inlet orifice pressure range must be between 36 PSIG and 70 PSIG.
- The controller oil inlet valve is set to maintain the oil level at the center of the controller sight window when oil inlet pressure is at midrange.
- Low or high oil levels are often caused by two problems:
  1. Excessive oil inlet pressure will cause the unit to overfill.
  2. Improper equalization between the crankcase and the level controller. See Oil Level Controller Operation Basics document on Kenco website for a more detailed explanation about the importance of equalization between controller and crankcase.

II. START-UP PROCEDURES:

- Ensure that the oil supply tank is full.
- After the engine has been running for 1 hour, visually check the oil level in the sight glass. The oil level should be in the center of the sight glass depending on controller oil inlet pressure.
- With the engine running, check the crankcase oil level. It should be the same as the oil level in the controller. If not, check the installation of the equalizing line (if applicable). Refer to Section IV "UNIVERSAL INDIRECT MOUNT ADAPTERS" for instructions.
- Check all piping connections for leaks and repair as needed.

III. SIX MONTH SUGGESTED MAINTENANCE PLAN:

Controller Oil Inlet Valve Service:

- Close the oil supply valve and disconnect the oil inlet supply line.
- Place a pan under the controller to catch the oil from the oil supply line.
- Remove and clean the controller oil inlet valve screen.
- Once the screen is clean, reassemble and open the oil supply valve.

Note: Dispose of oil in a proper container.

IV. OIL CONTROLLER MOUNTING ADAPTER INSTALLATION INSTRUCTIONS:

ARIEL COMPRESSOR DIRECT MOUNT ADAPTERS:

-23 and -23-FS (Ariel KBC 2/4/6 cylinder, KBD 2/4/6 cylinder and KBF 2/4/6 cylinder)

- Remove (2) existing 3/4" NPT pipe plugs from oil controller mounting pad on the even-side auxiliary end of the compressor frame. Install oil controller assembly using supplied gasket and (4) 3/8”-16UNC hexagon head bolts and lock washers. Note: Mounting bolts and lock washers not supplied by Kenco.

-24 and -24-FS (Ariel JGE, JGH, JGK, JGT, KBE, KBK, & KBT 2/4 cylinder)
-25 and -25-FS (Ariel JGU 2/4/6 cylinder, JGZ 2/4/6 cylinder, KBB 4/6 cylinder & KBV 4/6 cylinder)
-26 and -26-FS (Ariel KBU 2/4/6 cylinder & KBZ 2/4/6 cylinder)
-48A and -48A-FS (Ariel JGB 4/6 cylinder, JGC 2 cylinder, JGD 2 cylinder, JGF 2 cylinder & JGV 4/6 cylinder)
-48B and -48B-FS (Ariel JGC 4/6 cylinder, JGD 4/6 cylinder & JGF 4/6 cylinder with standard shaft rotation and a single chain drive)
(Ariel JGC 6 cylinder, JGD 6 cylinder & JGF 6 cylinder with reverse shaft rotation and a dual chain drive)
-48C and -48C-FS (Ariel JGC 4/6 cylinder & JGD 4/6 cylinder & JGF 4/6 cylinder with reverse shaft rotation and a single chain drive)
(Ariel JGC 6 cylinder, JGD 6 cylinder & JGF 6 cylinder with standard shaft rotation and a dual chain drive)

- Remove the sight glass located on the crankcase and replace it with the oil controller assembly using the sight glass mounting bolts and Kenco supplied gasket.

CLARK ENGINE DIRECT MOUNT ADAPTERS:

-1 and -1-FS (Clark MA & CFA)
-2 (Clark HMB & TMP)
-3 and -3-FS (Clark RA, HRA, HBA, HCA, HLA, TCV & TLA)

- Remove the visual oil gauge assembly from the engine and replace it with the oil level controller and adapter assembly using mounting bolts and supplied gasket(s). Note: Mounting bolts are not supplied by Kenco.

COOPER-BESSEMER ENGINE DIRECT MOUNT ADAPTERS:

-6 and -6-FS (Cooper-Bessemer GMW)
-7 and -7-FS (Cooper-Bessemer GMV)
-8 and -8-FS (Cooper-Bessemer GMX)
-16 and -16-FS (Cooper-Bessemer BMV & 275) Note: Available with varied oil levels.

- Remove the visual oil gauge assembly from the engine and replace it with the oil level controller and adapter assembly using supplied gasket(s) and mounting bolts when applicable.

COOPER-SUPERIOR COMPRESSOR (FORMALLY WHITE) DIRECT MOUNT ADAPTERS:

-14 and -14-FS (Cooper Superior-Formerly White compressor)

- Remove the triangular blind flange located on the compressor and mount the controller assembly in its place using supplied gasket.

INGERSOLL-RAND ENGINE DIRECT MOUNT ADAPTERS:

-4 and -4-FS (Ingersoll-Rand SVG & KVS)
-5 and -5-FS (Ingersoll-Rand KVG)

- Remove the visual oil gauge assembly from the engine and replace it with the oil level controller and adapter assembly using supplied gasket and mounting bolts when applicable.
- If an equalizing line exists for the engine sight glass, detach the equalizing line from the sight glass and reattach it to the vent connection located at the top of the controller adapter.

Note: It is important to ensure that there are no loops in this line. It must be trap free and self-draining.

MECHANICAL LUBRICATOR HOUSING DIRECT MOUNT ADAPTERS:
-11 and -11-FS (Mechanical Lubricator Mounting)

- Drill Ø25/32” holes in the lubricator housing as shown below and mount the controller with the inlet located on the top side using the seal washers and mounting bolts provided.
- Place the seal washers between the controller housing and the lubricator housing as shown.

FIGURE 1: MECHANICAL LUBRICATOR HOUSING HOLE LOCATIONS/ASSEMBLY INSTRUCTIONS

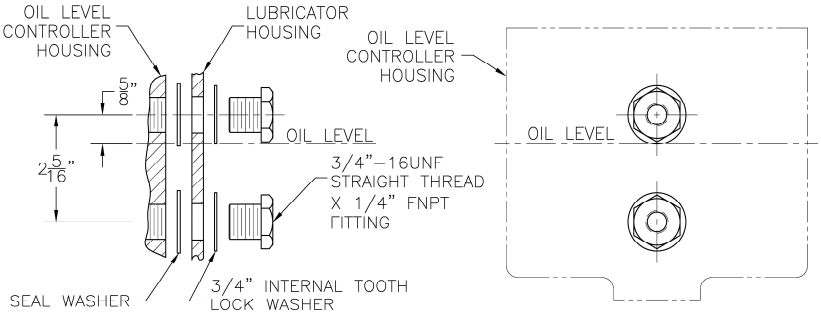

UNIVERSAL INDIRECT MOUNT ADAPTERS:
-9 and -9-FS (Universal mounting adapter)
-10 and -10-FS (Slotted adapter for universal mounting)
-12 and -12-FS (Post mount for 1/2" pipe)

- Attach the controller to the mounting adapter using Kenco supplied bolts and washers, if applicable. The maximum recommended bolt torque is 20 ft-lbs.
- Mount controller level and plumb with the centerline of sight window at the same elevation as the running oil level in the crankcase.
- Install an oil supply line from the crankcase to one of the (3) 3/4” FNPT outlet ports on the controller housing.
- An equalizing line must be installed between the crankcase and the 3/8” FNPT vent port on top of controller to ensure that the oil level inside the controller coincides with the oil level inside the crankcase. The minimum line I.D. must be Ø3/8” and length must be kept under 2 feet if possible. DO NOT loop this line. It must be trap free and self-draining with a downward pitch flow by gravity.

FIGURE 2: EXAMPLE OF -9 UNIVERSAL MOUNTING ADAPTER

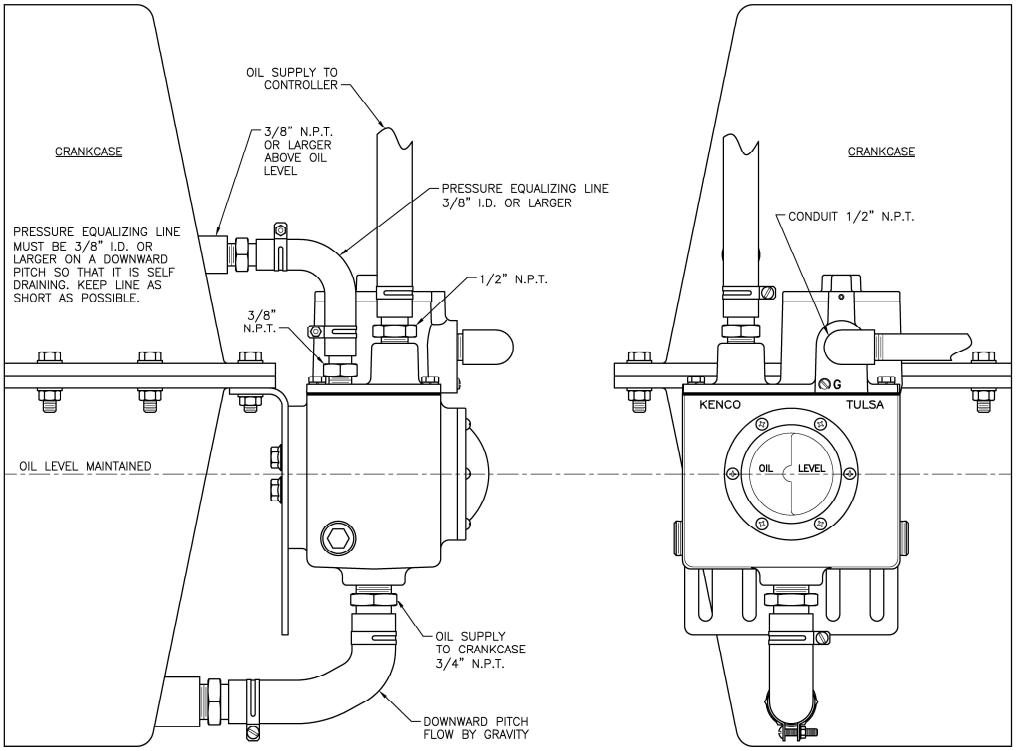

WAUKESHA ENGINE DIRECT MOUNT ADAPTERS:

-17 and -17-FS (Waukesha VHP F2895, F3521, F5108, L5790 & L7042)-Replaces inspection door with single mounting bolt.
-18 and -18-FS (Same as -17 except with integral Kenco model 1618 Low Flow Meter)-Replaces inspection door
-27 and -27-FS (Waukesha VHP F2895, F3521, F5108, L5790, L5794 & L7042)-Replaces inspection door with two mounting bolts.
-28 and -28-FS (Waukesha VHP P9394)-Replaces inspection door
-37 and -37-FS (Waukesha P9390)-Replaces inspection door
-38 and -38-FS (Same as –37 except with integral Kenco model 1618 Low Flow Meter)-Replaces inspection door
-39 and -39-FS (Same as -37 except with integral Kenco model 14308 Low Flow Meter)-Replaces inspection door
-40 and -40-FS (Same as -17 except with integral Kenco model 14308 Low Flow Meter)-Replaces inspection door

- Remove the cast aluminum inspection door from the engine. Remove the clamp bar from the old door.
- For -17, -18, -37, -38, -39, & -40, install the O-ring into the groove of the Kenco door and replace the clamp bar on the back side of the door using the bolts, washers, and O-rings supplied by Kenco.
- For –27 and -28, install the O-ring into the groove of the Kenco door and replace the clamp bar on the back side of the door using the two bolts and the seal washers supplied by Kenco.
- Place the controller assembly into the inspection port of the engine and tighten the bolt(s) down.
- Install oil inlet line into the controller oil valve or the Kenco Low Flow Meter inlet port, if applicable.
- For models with a Low Flow Meter, refer to the additional instructions supplied with the 1618 or 14308 Kenco Low Flow meter.

V. KENCO MODEL 50-KFS / 75-KFS FIRE SAFE VALVE INSTALLATION INSTRUCTIONS:

(United States Patent No. 3,877,476)

- All oil lines between the oil supply tank and the Fire Safe Valve, between the crankcase and the Fire Safe Valve, and between the Fire Safe Valve and the oil controller must be steel. DO NOT use rubber or aluminum oil lines.
- The size of the lines connected to the inlet and outlet of the Fire Safe Valve should be equal to or larger than the nominal port size of the Fire Safe Valve.
- Flow through the Fire Safe Valve is bidirectional. Either port can serve as the inlet or outlet.
- Any orientation of the Thermal Fusing Element is acceptable during installation, but facing downward is preferred. This ensures that the fuse is directly exposed to the heat source in case of a fire.
- The 50-KFS valve has 1/2” FNPT threads and should be installed in the oil supply line as close to the controller as possible. Meters, filters and pressure regulators should be installed between the controller and the 50-KFS.
- The 75-KFS valve has 3/4” FNPT threads and should be located as close to the crankcase as possible and the oil outlet line should be 3/4” I.D. minimum to insure adequate oil flow to the crankcase.

Note: The 75-KFS valve is not required when using –FS adapters other than –9, -10 & –12.
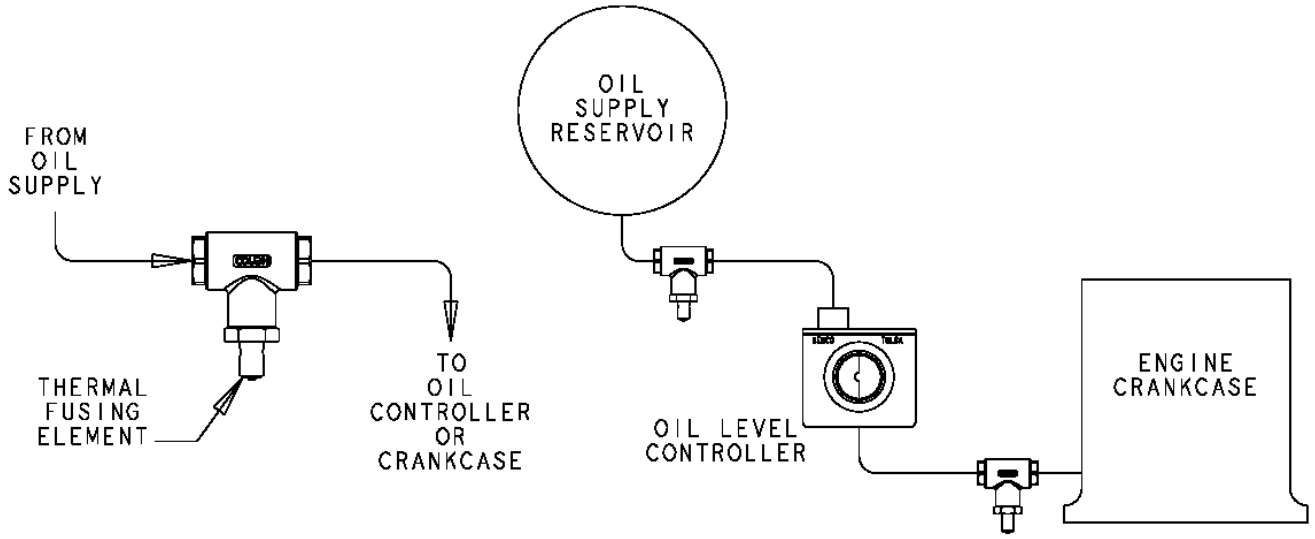
FIGURE 3: FIRE SAFE VALVE INSTALLATION