YOU'RE IN CONTROL WITH KENCO

LUBRICATION CONTROL AND MONITORING EQUIPMENT FOR INDUSTRIAL ENGINES AND GAS COMPRESSORS

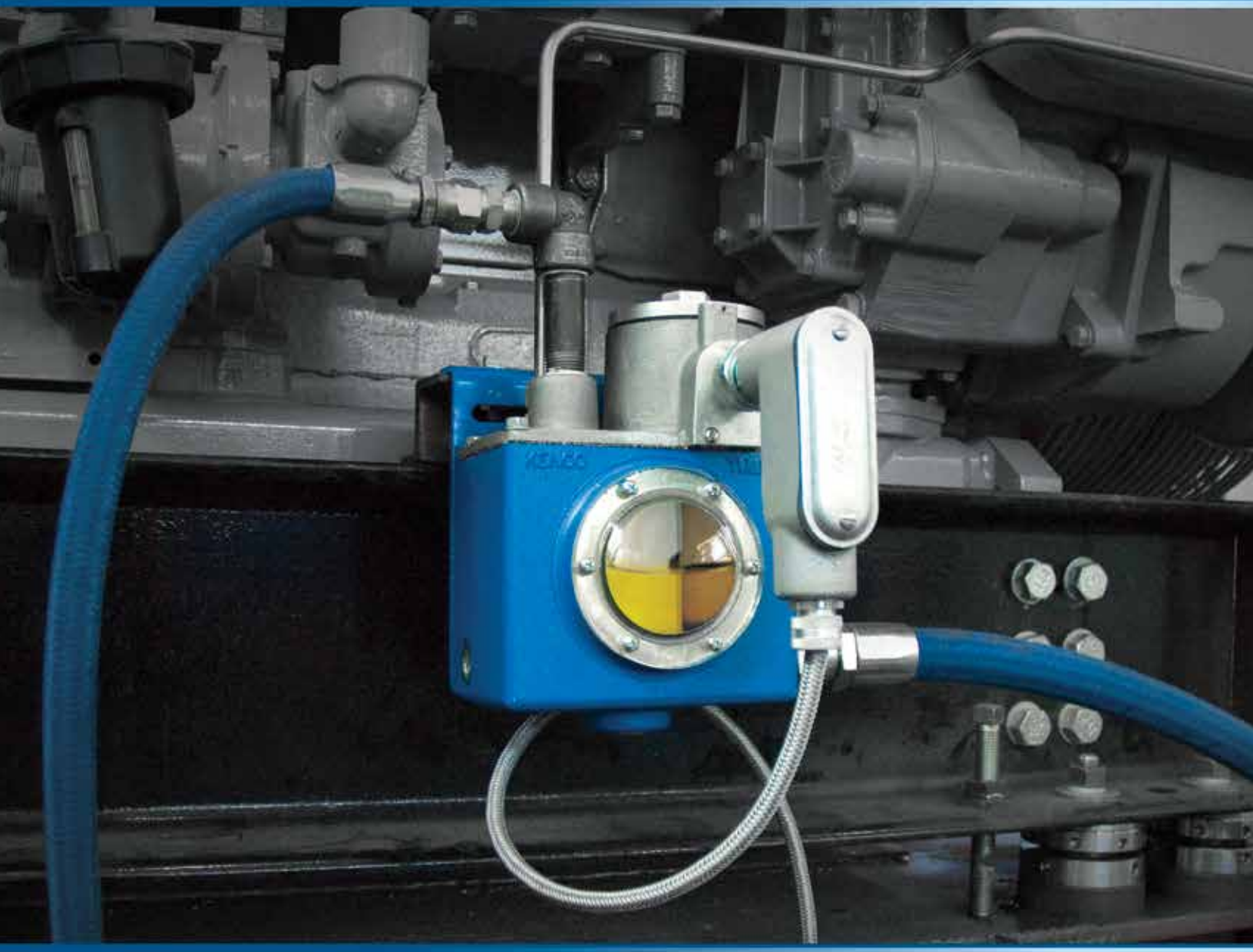

OIL LEVEL CONTROLLERS AND OIL LEVEL SWITCHES CONFORMING TO THE PROVISIONS OF CSA AND THE ATEX DIRECTIVE

KENCO® ENGINEERING

visit our online business center at: **kenco-eng.com**

OIL LEVEL CONTROLLERS AND OIL LEVEL SWITCHES

FEATURES

- Reduces maintenance by maintaining a constant oil level
- Protects against lubrication failure
- Controller mechanism fully removable without draining oil
- Easy view convex sight window
- Low to high pressure applications
- Oil inlet allows for piping configurations from any direction
- Oil outlets on either side of housing and in the bottom to allow for various piping configurations
- Easy access to switch float through 3/8" vent hole in top of housing for simple testing of switch operation
- Direct mount adapters eliminate equalizing problems and reduce installation costs
- CSA and ATEX explosion proof certification for hydrogen gas environments now available on KLCE/KHL/KSHL/KSLL/KES models
- Oil level controllers for synthetic oil applications now available

OPERATING PRINCIPLE FOR OIL LEVEL CONTROLLERS

Kenco oil level controllers are designed to maintain the running oil level in the crankcase of stationary engines, compressors, and mechanical lubricator boxes. The Kenco oil controller works in conjunction with an overhead oil supply system which feeds the oil level controller. As the oil is consumed, the oil controller supplies the required oil. The oil controller controls the amount of oil in the crankcase by a float controlled valve. The valve opens and closes as oil is needed in the crankcase to provide a constant oil level.

APPLICATIONS

- Stationary engines
- Stationary compressors
- Mechanical lubricators
- Pumps

OPERATING PRINCIPLE FOR OIL LEVEL SWITCHES

Oil level switches are designed as a safety device for the stationary engine or compressor. The oil level switch monitors the oil level in the crankcase. The level within the crankcase directly corresponds with the oil level in the oil level switch housing. The engine or compressor constantly consumes the oil from the crankcase. If the oil level in the crankcase drops past the designated level, the switch will trip and trigger an alarm.

Featured above and on cover: KLCE-9 is an oil level controller with an electric switch in an explosion proof enclosure with a slotted universal mounting bracket.

Featured at right: KLCM-9 is an oil level controller with an electric switch in a Type 4 enclosure with a slotted universal mounting bracket.

Location Courtesy of A.G. Equipment, Tulsa, Oklahoma

MODEL SPECIFICATIONS

MODEL K512 OIL LEVEL CONTROLLER WITH CASE-TO-GROUND ELECTRIC SWITCH; ALSO K512-TB / K512HL / K512HL-TB

Application of Model K512:
The Kenco K512 utilizes the operating principles of both the oil level controller and the electric switch. The case-to-ground switch and the circuit will remain open until the oil level drops 1/2" below the centerline of sight window. The K512 is for non-hazardous locations and locations where space is limited.

Application of Model K512-TB:
The Kenco K512-TB is constructed with a switch contact test button to easily check for proper wiring installation and system response to a low oil level condition.

Application of Model K512HL:
The Kenco K512HL is constructed with one case-to-ground switch contact circuit that remains open until the oil level is 1/2" above or 1/2" below the centerline of sight window.

Application of Model K512HL-TB:
The Kenco K512HL-TB is constructed with a switch contact test button to easily check for proper wiring installation and system response to a low or high oil level condition.

Standard Materials of Construction:
Valve Seat: Nitrile (Fluorocarbon also available)
Housing and Valve Orifice Material: Aluminum
Float Material: Closed Cell Polyurethane
Oil Inlet Screen: 20 Mesh Brass Cloth
Sight Window: U.V. Stabilized Transparent Nylon or Hermetically Sealed Glass (optional)

Process Connections:
Oil Inlet Connection Size: 1/2" FNPT
Oil Outlet Connection Sizes:
(2) 1/2" FNPT Side Ports
(1) 3/4" FNPT Bottom Port

Oil Inlet Data:
Static Head Pressure Range: 2–12 Feet
No High Pressure Models Available

Flow Rate Test Results:
(Tested at 2' of Head using Mobil Pegasus 805 40 wt. oil at temperatures shown below)
20°-30° F: 10.96 GPD
30°-40° F: 14.14 GPD
40°-50° F: 16.76 GPD

Electric Switch Specifications:
Switch Trip Point: See Application Notes
Switch Rating: 2 amps, 30 VAC/VDC
Max. Temp: 180° F/82° C
Electrical Connection Size: 1/2" FNPT
Circuitry: Case-To-Ground

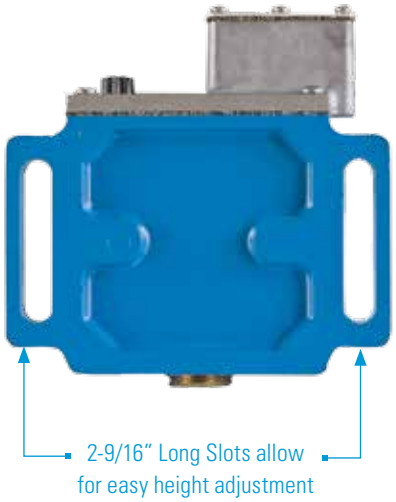

MODEL KLC OIL LEVEL CONTROLLER

Application of Model KLC:
To supply and control the amount of oil in the crankcase.

Standard Materials of Construction:
Valve Seat: Nitrile (Fluorocarbon also available)
Housing and Valve Orifice Material: Aluminum
Float Material: Closed Cell Polyurethane
Oil Inlet Screen: 20 Mesh Brass Cloth
Sight Window: U.V. Stabilized Transparent Nylon or Hermetically Sealed Glass (optional)

Oil Inlet Specifications:
Static Head Pressure Range: 2–25 Feet
High Pressure Models:
HPA: 10–35 psi
HPB: 36–70 psi

Process Connections:
Oil Inlet Connection Size: 1/2" FNPT
Oil Outlet Connection Size: (3) 3/4" FNPT

Flow Rate Test Results:
(Standard unit tested at 32°F, SAE 30)
2' Head: 1.45 GPH
4' Head: 2.46 GPH
6' Head: 3.49 GPH
(HPA unit tested at 32°F, SAE 30)
10 psi: 4.09 GPH
(HPB unit tested at 32°F, SAE 30)
36 psi: 3.38 GPH
70 psi: 6.92 GPH

Also Available:
SYN: Synthetic Oil Applications—Contact Kenco with Type and Specific Gravity of oil used in the application.

MODEL SPECIFICATIONS

MODEL KLCE OIL LEVEL CONTROLLER WITH ELECTRIC SWITCH IN EXPLOSION PROOF ENCLOSURE; ALSO KHL / KSHL / KSLL

Application of Model KLCE:
The Kenco KLCE utilizes the operating principles of both the oil level controller and the electric switch. Switch trips when oil level drops 3/4" below centerline of sight window.

Application of Model KHL:
The Kenco KHL is constructed with one level switch, which will alarm at 3/4" above centerline, and will also alarm at 3/4" below centerline.

Application of Model KSHL:
The Kenco KSHL is constructed with 2 independent switches, one for high level alarm 3/4" above centerline and another for low level alarm at 3/4" below centerline.

Application of Model KSLL:
The Kenco KSLL is constructed with 2 independent switches for low level trip points of 5/8" and 7/8" below centerline.

Standard Materials of Construction:
Valve Seat: Nitrile (Fluorocarbon also available)
Housing and Valve Orifice Material: Aluminum
Float Material: Closed Cell Polyurethane
Oil Inlet Screen: 20 Mesh Brass Cloth
Sight Window: U.V. Stabilized Transparent Nylon or Hermetically Sealed Glass (optional)

Process Connections:
Oil Inlet Connection Size: 1/2" FNPT
Oil Outlet Connection Size: (3) 3/4" FNPT

Oil Inlet Data:
Static Head Pressure Range: 2-25 Feet
High Pressure Models:
HPA: 10–35 psi
HPB: 36–70 psi

Flow Rate Test Results:
(Standard unit tested at 32°F, SAE 30)
2' Head: 1.45 GPH
4' Head: 2.46 GPH
6' Head: 3.49 GPH
(HPA unit tested at 32°F, SAE 30)
10 psi: 4.09 GPH
(HPB unit tested at 32°F, SAE 30)
36 psi: 3.38 GPH
70 psi: 6.92 GPH

Electric Switch Specifications:
Switch Trip Point: See Application Notes
Switch Rating: 15 amp, 125/250/480 VAC
0.5 amp, 125 VDC; 0.25 amp, 250 VDC
1/8 hp, 125 VAC; 1/4 hp, 250 VAC
Max. Temp: 180°F/ 82°C
Electrical Connection Size: 1/2" FNPT
Circuitry: Single Pole Double Throw

C US
CLASS I, DIV. 1 & 2, GRPS. B,C,D
T-Code T5

0344
II 2 G
Ex d IIB+H_2 T5
-35° C ≤ Tamb ≤ +85° C
KEMA 07ATEX0129X

Also Available:
DPDT: Double Pole Double Throw Switch (KLCE/KHL only)
SYN: Synthetic Oil Applications—Contact Kenco with Type and Specific Gravity of oil used in the application.

MODEL KLCM OIL LEVEL CONTROLLER WITH ELECTRIC SWITCH IN CSA® TYPE 4 ENCLOSURE

Application of Model KLCM:
The Kenco KLCM utilizes the operating principles of both the oil level controller and the electric switch. Switch trips when oil level drops 3/4" below centerline of sight window.

Applications:
Intrinsically safe applications with an approved safety barrier.

Standard Materials of Construction:
Valve Seat: Nitrile (Fluorocarbon also available)
Housing and Valve Orifice Material: Aluminum
Float Material: Closed Cell Polyurethane
Oil Inlet Screen: 20 Mesh Brass Cloth
Sight Window: U.V. Stabilized Transparent Nylon or Hermetically Sealed Glass (optional)

Process Connections:
Oil Inlet Connection Size: 1/2" FNPT
Oil Outlet Connection Size: (3) 3/4" FNPT

Oil Inlet Data:
Static Head Pressure Range: 2–25 Feet
High Pressure Models:
HPA: 10–35 psi
HPB: 36–70 psi

Flow Rate Test Results:
(Standard unit tested at 32°F, SAE 30)
2' Head: 1.45 GPH
4' Head: 2.46 GPH
6' Head: 3.49 GPH
(HPA unit tested at 32°F, SAE 30)
10 psi: 4.09 GPH
(HPB unit tested at 32°F, SAE 30)
36 psi: 3.38 GPH
70 psi: 6.92 GPH

Electric Switch Specifications:
Switch Trip Point: See Application Note
Switch Rating: 11 amp, 277 VAC
0.5 amp, 125 VDC
0.25 amp, 250 VDC
1/3 hp, 125/250 VAC
Max. Temp: 180°F/ 82°C
Electrical Connection Size: 1/2" FNPT
Circuitry: Single Pole Double Throw
Switch Test Button: Standard

Also Available:
SYN: Synthetic Oil Applications—Contact Kenco with Type and Specific Gravity of oil used in the application.

TYPE 4

MODEL SPECIFICATIONS

MODEL KES ELECTRIC SWITCH IN EXPLOSION PROOF ENCLOSURE; ALSO KHL-ES / KSHL-ES / KSLL-ES

Application of Model KES:
The Kenco KES monitors the oil level in the crankcase and signals shut down in case of low oil level. Switch trips when oil level drops 3/4" below centerline of sight window. It has no oil level controller function.

Application of Model KHL-ES:
The Kenco KHL-ES is constructed with one level switch, which will alarm at 3/4" above centerline, and will also alarm at 3/4" below centerline.

Application of Model KSHL-ES:
The Kenco KSHL-ES is constructed with 2 independent switches, one for high level alarm 3/4" above centerline and another for low level alarm at 3/4" below centerline.

Application of Model KSLL-ES:
The Kenco KSLL-ES is constructed with 2 independent switches for low level trip points of 5/8" and 7/8" below centerline.

Standard Materials of Construction:
Housing Material: Aluminum
Float Material: Closed Cell Polyurethane
Sight Window: U.V. Stabilized Transparent Nylon or Hermetically Sealed Glass (optional)

Electric Switch Specifications:
Switch Trip Point: See Application Notes
Switch Rating: 15 amp, 125/250/480 VAC
0.5 amp, 125 VDC; 0.25 amp, 250 VDC
1/8 hp, 125 VAC; 1/4 hp, 250 VAC
Max. Temp: 180°F/ 82°C
Electrical Connection Size: 1/2" FNPT
Circuitry: Single Pole Double Throw

Process Connections:
Oil Outlet Connection Size: (3) 3/4" FNPT

Also Available:
DPDT: Double Pole Double Throw Switch (KES/KHL-ES Only)
SYN: Synthetic Oil Applications—Contact Kenco with Type and Specific Gravity of oil used in the application.

C US
CLASS I,
DIV. 1 & 2,
GRPS. B,C,D
T-Code T5

0344
II 2 G
Ex d IIB+H_2 T5
-35° C ≤ Tamb ≤ +85° C
KEMA 07ATEX0129X

MODEL KLCP OIL LEVEL CONTROLLER WITH PNEUMATIC SWITCH

Application of Model KLCP:
The Kenco KLCP utilizes the operating principles of both the oil level controller and the pneumatic switch. Switch opens when oil level drops 3/4" below centerline of sight window.

Applications:
Remote or offshore locations with no electric power

Standard Materials of Construction:
Valve Seat: Nitrile (Fluorocarbon also available)
Housing and Valve Orifice Material: Aluminum
Float Material: Closed Cell Polyurethane
Oil Inlet Screen: 20 Mesh Brass Cloth
Sight Window: U.V. Stabilized Transparent Nylon or Hermetically Sealed Glass (optional)

Oil Inlet Data:
Static Head Pressure Range: 2–25 Feet
High Pressure Models:
HPA: 10–35 psi
HPB: 36–70 psi

Process Connections:
Oil Inlet Connection Size: 1/2" FNPT
Oil Outlet Connection Size: (3) 3/4" FNPT

Flow Rate Test Results:
(Standard unit tested at 32°F, SAE 30)
2' Head: 1.45 GPH
4' Head: 2.46 GPH
6' Head: 3.49 GPH
(HPA unit tested at 32°F, SAE 30)
10 psi: 4.09 GPH
(HPB unit tested at 32°F, SAE 30)
36 psi: 3.38 GPH
70 psi: 6.92 GPH

Pneumatic Switch Specifications:
Switch Trip Point: See Application Note
Maximum Air Valve Inlet Pressure: 100 psi
Max. Temp: 180°F/ 82°C
Air Inlet Connection Size: 1/4" FNPT
Air Exhaust Connection: 1/4" O.D. Tube X 1/8" MNPT Tube Fitting
Switch Test Button: Standard

Also Available:
SYN: Synthetic Oil Applications—Contact Kenco with Type and Specific Gravity of oil used in the application.

MODEL KPS PNEUMATIC OIL LEVEL SWITCH
Same as model KLCP except with no oil level controller function

MODEL DIMENSIONS

(Refer to Kenco website for models not shown)

Model K512 / K512-TB / K512HL / K512HL-TB Oil Level Controller with Case-to-Ground Electric Switch Contact

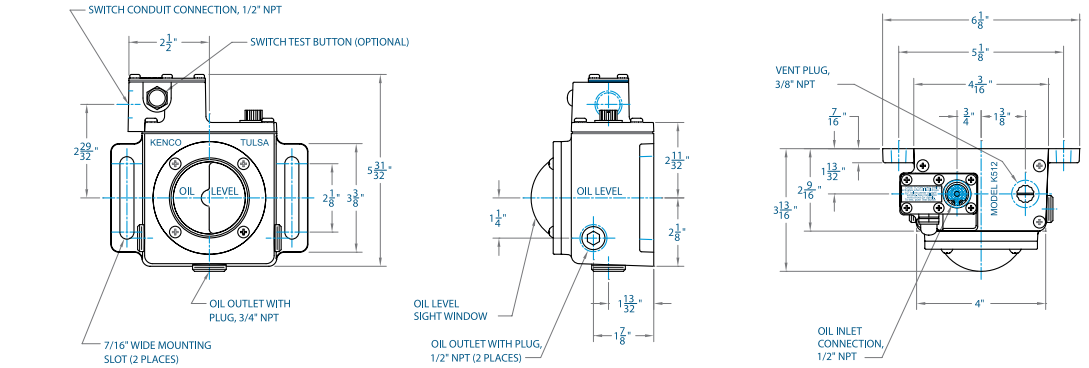

Model KLCE / *KES / KHL / *KHL-ES / KSHL / *KSHL-ES / KSLL / *KSLL-ES Oil Level Controllers with Switch in Explosion Proof Enclosure

*Models KES / KHL-ES / KSHL-ES / KSLL-ES are Electric Oil Level Switches Only and have No Oil Inlet Connection and No Oil Level Controller Function

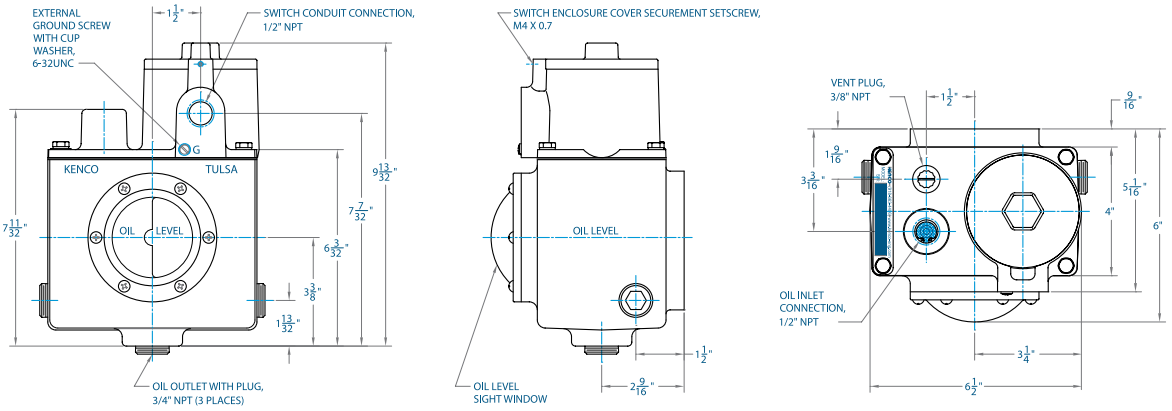

Model KLCP Oil Level Controller with Pneumatic Oil Level Switch

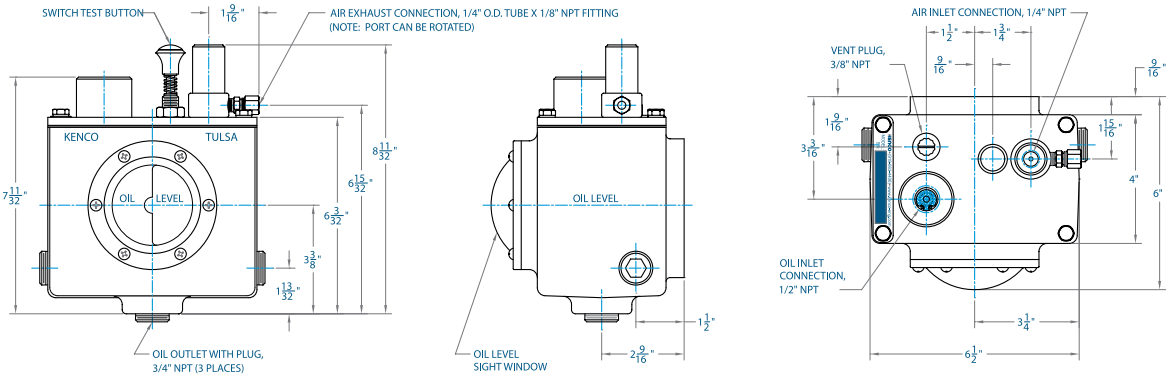

Model KLCM Oil Level Controller with Electric Switch in CSA® Type 4 Enclosure

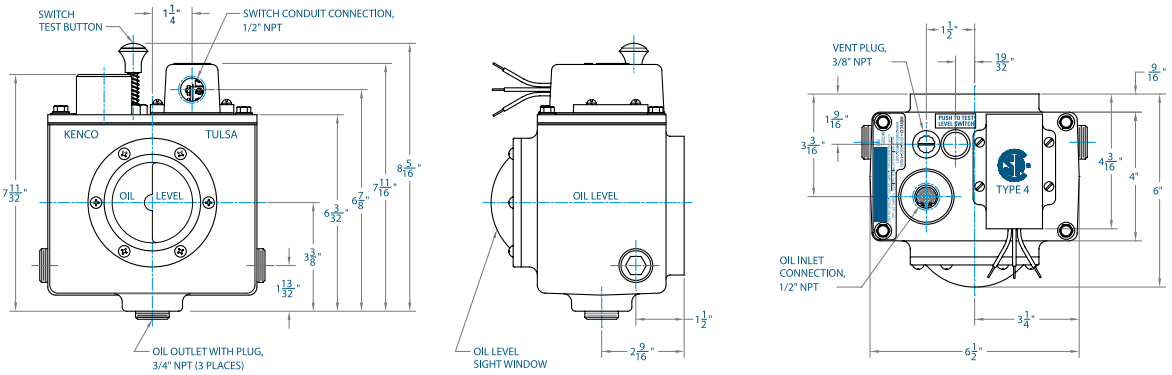

Note: Dimensions are for reference purposes only and are subject to change at any time without notice.

REPLACEMENT KITS

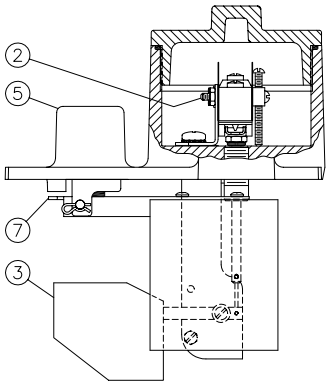

Model KLCE Parts Kits

Kit 1: All Working Parts Kit
Order #RK-KLCE
Consists of:
1-Cover Plate Assembly As Shown Above
1-Cover Plate Gasket
4-Mounting Bolts
1-Vent Plug

Kit 2: Switch Kit
Order #MS-KLCE
Consists of:
1-Switch Assembly With Bracket
1-Switch Bracket Isolator
2-Mounting Screws

Kit 3: Switch Float Kit
Order #MF-KLCE
Consists of:
1-Switch Float Assembly with Bracket
2-Mounting Screws
1-Switch Push Rod Retainer Wire

Kit 4: Controller Gasket / Seal Kit
Order #GS-KLCE
Consists of:
1-Cover Plate Gasket
1-Sight Window O-Ring Seal
1-Oil Inlet Float Seal
1-Switch Enclosure O-Ring Seal
1-Switch Push Rod O-Ring Seal

Kit 5: Oil Inlet Housing Kit
Order #OI-KLCE
Consists of:
1-Oil Inlet Screen
1-Screen Retainer Ring

Kit 6: Sight Window Kit
Order #GL-KLC
Order #GL-KLC-GW
Consists of:
1-Sight Window
1-Sight Window O-Ring Seal
6-Mounting Screws

Kit 7: Oil Inlet Float Kit
Order #OF-KLC
Order #OF-KLC-HPA
Order #OF-KLC-HPB
Consists of:
1-Float Assembly With Seal
1-Float Hinge Bracket
2-Mounting Screws
1-Oil Inlet Valve Orifice
1-Clevis Pin
1-Hitch Pin Clip

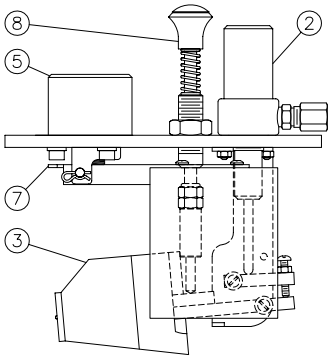

Model KLCP Parts Kits

Kit 1: All Working Parts Kit
Order #RK-KLCP
Consists of:
1-Cover Plate Assembly As Shown Above
1-Cover Plate Gasket
4-Mounting Bolts
1-Vent Plug

Kit 2: Air Valve Kit
Order #AV-KLCP
Consists of:
1-Complete Air Valve Assembly
1-Exhaust Ring
1-Exhaust Ring O-Ring Seal
1-Air Exhaust Connector
1-Actuator Rod

Kit 3: Air Valve Float Kit
Order #AF-KLCP
Consists of:
1-Air Valve Float Assembly with Bracket
2-Mounting Screws
2-Hexagon Nuts

Kit 4: Controller Gasket / Seal Kit
Order #GS-KLCP
Consists of:
1-Cover Plate Gasket
1-Sight Window O-Ring Seal
1-Oil Inlet Float Seal
1-Oil Inlet Housing O-Ring Seal
1-Air Valve Internal O-Ring Seal
1-Test Button Push Rod O-Ring Seal
1-Air Valve Exhaust Ring O-Ring Seal

Kit 5: Oil Inlet Housing Kit
Order #OI-KLC
Consists of:
1-Oil Inlet Screen
1-Screen Retainer Ring
1-Oil Inlet Housing
1-Housing O-Ring Seal
3-Mounting Screws
3-Lock Washers

Kit 6: Sight Window Kit
Order #GL-KLC
Order #GL-KLC-GW
Consists of:
1-Sight Window
1-Sight Window O-Ring Seal
6-Mounting Screws

Kit 7: Oil Inlet Float Kit
Order #OF-KLC
Order #OF-KLC-HPA
Order #OF-KLC-HPB
Consists of:
1-Float Assembly With Seal
1-Float Hinge Bracket
2-Mounting Screws
1-Oil Inlet Valve Orifice
1-Clevis Pin
1-Hitch Pin Clip

Kit 8: Test Button Kit
Order #TB-KLCP
Consists of:
1-Complete Test Button Assembly

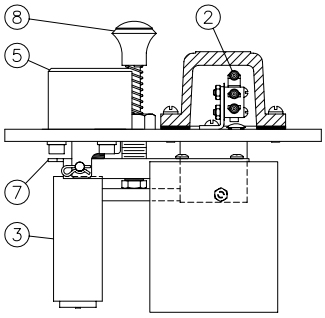

Model KLCM Parts Kits

Kit 1: All Working Parts Kit
Order #RK-KLCM
Consists of:
1-Cover Plate Assembly As Shown Above
1-Cover Plate Gasket
4-Mounting Bolts
1-Vent Plug

Kit 2: Switch Kit
Order #MS-KLCM
Consists of:
1-Switch Assembly With Bracket
2-Switch Assembly Mounting Screws
1-Switch Enclosure Gasket
4-Switch Enclosure Mounting Screws
1-Ground Wire with Ring Terminal

Kit 3: Switch Float Kit
Order #MF-KLCM
Consists of:
1-Switch Float Assembly with Bracket
2-Mounting Screws
1-Switch Push Rod Retainer Wire

Kit 4: Controller Gasket / Seal Kit
Order #GS-KLCM
Consists of:
1-Cover Plate Gasket
1-Sight Window O-Ring Seal
1-Oil Inlet Float Seal
1-Oil Inlet Housing O-Ring Seal
1-Switch Push Rod O-Ring Seal
1-Test Button Push Rod O-Ring Seal
1-Switch Enclosure Gasket

Kit 5: Oil Inlet Housing Kit
Order #OI-KLC
Consists of:
1-Oil Inlet Screen
1-Screen Retainer Ring
1-Oil Inlet Housing
1-Housing O-Ring Seal
3-Mounting Screws
3-Lock Washers

Kit 6: Sight Window Kit
Order #GL-KLC
Order #GL-KLC-GW
Consists of:
1-Sight Window
1-Sight Window O-Ring Seal
6-Mounting Screws

Kit 7: Oil Inlet Float Kit
Order #OF-KLC
Order #OF-KLC-HPA
Order #OF-KLC-HPB
Consists of:
1-Float Assembly With Seal
1-Float Hinge Bracket
2-Mounting Screws
1-Oil Inlet Valve Orifice
1-Clevis Pin
1-Hitch Pin Clip

Kit 8: Test Button Kit
Order #TB-KLCM
Consists of:
1-Complete Test Button Assembly

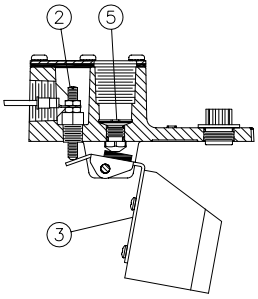

Model K512 / K512-TB Parts Kits

Kit 1: K512 / K512-TB All Working Parts Kit
Order #RK-K512
Order #RK-K512-TB
Consists of:
1-Cover Plate Assembly As Shown Above
1-Cover Plate Gasket
4-Mounting Screws
1-Vent Plug

Kit 2: Switch Kit
Order #MS-K512
Consists of:
1-Insulator Bushing
1-Setscrew
2-Hexagon Nuts
1-Ring Terminal

Kit 3: Switch Float Kit
Order #MF-K512
Consists of:
1-Float Assembly With Seal
1-Clevis Pin
1-Hitch Pin Clip

Kit 4A: K512 Gasket / Seal Kit
Order #GS-K512
Consists of:
1-Cover Plate Gasket Set
1-Sight Window O-Ring Seal
1-Oil Inlet Float Seal

Kit 4B: K512-TB Gasket / Seal Kit
Order #GS-K512-TB
Consists of:
1-Cover Plate Gasket Set
1-Sight Window O-Ring Seal
1-Oil Inlet Float Seal
1-Test Button O-Ring Seal

Kit 5: Oil Inlet Housing Kit
Order #OI-K512
Consists of:
1-Oil Inlet Screen
1-Screen Retainer Ring

Kit 6: Sight Window Kit
Order #GL-K512
Order #GL-K512-GW
Consists of:
1-Sight Window
1-Sight Window O-Ring Seal
4-Mounting Screws

Kit 7: K512-TB Test Button Kit
Order #TB-K512
Consists of:
1-Complete Test Button Assembly

Model K512HL and K512HL-TB Kits

Refer to Kenco Website

KENCO ADAPTERS

CONTROLLER-TO-CRANKCASE MOUNTING ADAPTERS

(Note: " ∨ " denotes controller mounting surface.)

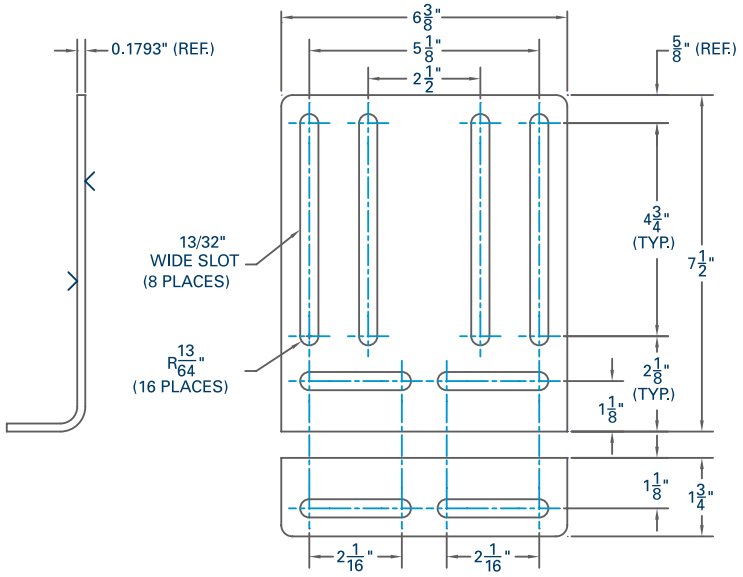

TYPE 9

Universal Mounting Bracket for Any Engine

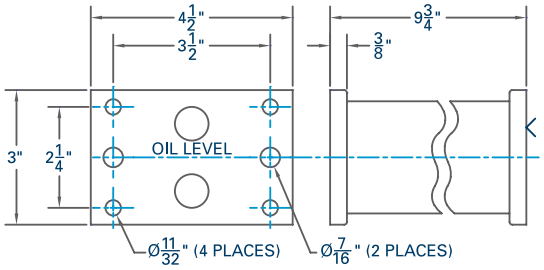

TYPE 24

For Ariel (2/4 Throw) JGE, JGH, JGK, and JGT Compressors

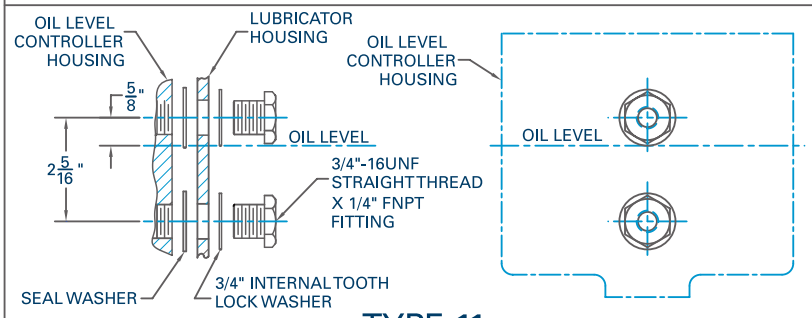

TYPE 11

For Mechanical Lubricator

(Drill 25/32"Ø holes in lubricator housing to mount)

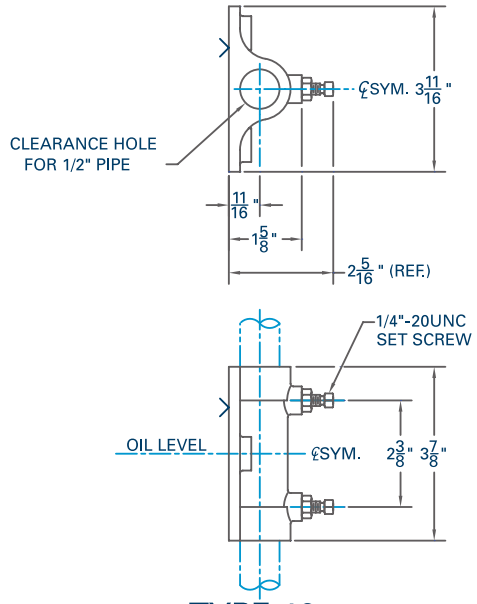

TYPE 12

For 1/2" Pipe

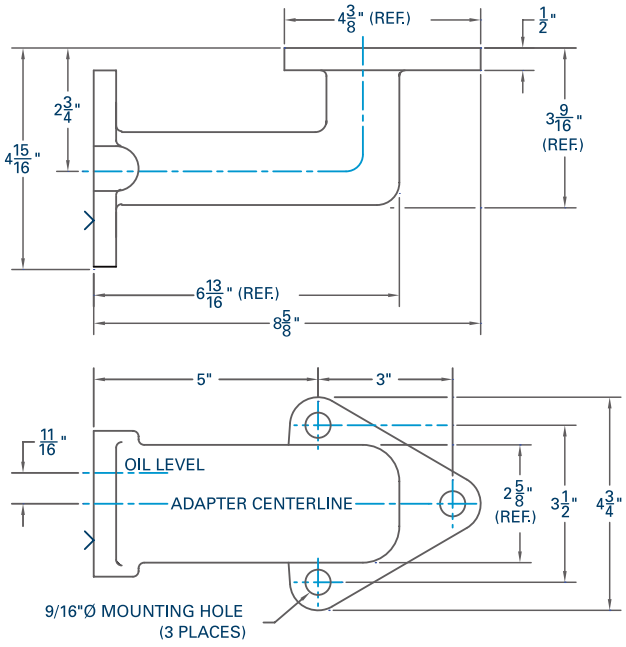

TYPE 14

Cooper Superior Compressor (Formerly White)

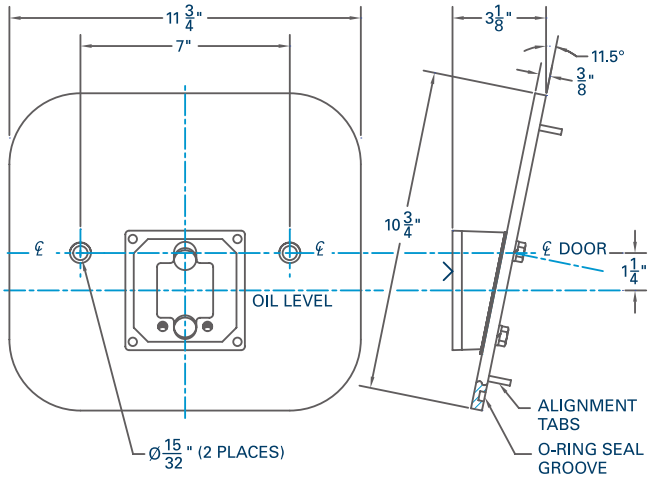

TYPE 27

Waukesha VHP Engines

(Supplied with all mounting hardware/seals)

TYPE 17

Similar to type 27 except for use with old Waukesha engines having inspection door with (1) mounting bolt

CONTROLLER-TO-CRANKCASE MOUNTING ADAPTERS

NUMBER	DESCRIPTION
-1	Clark MA & CFA
-2	Clark HMB & TMP
-3	Clark RA, HRA, HBA, HCA, HLA & TLA
-4*	Ingersoll-Rand SVG & KVS
-5	Ingersoll-Rand KVG
-6	Cooper-Bessemer GMW
-7	Cooper-Bessemer GMV
-8	Cooper-Bessemer GMX
-9*	Universal Mounting Adapter
-9MS*	KLCE type housing with four 3/8"-16UNC integral mounting studs for use with -9 universal mounting adapter or any mounting configuration which incorporates the stud pattern (Note: This option does not include the universal mounting adapter)
-10*	Slotted Adapter for Universal Mounting
-11	Mechanical Lubricator Mounting
-12*	Post Mount For 1/2" Pipe
-14	Cooper Superior Compressor (Formerly White)
-15	Ingersoll-Rand XVG & PVG
-16	Cooper-Bessemer BMV & 275 (Available with varied oil level)
-17	Waukesha VHP Engines F2895, F3251, F5108, L5790 and L7042 (Replaces Inspection Door with Single Bolt Mounting Arrangement)
-18	Waukesha VHP Engines F2895, F3251, F5108, L5790 and L7042 (Same as -17 except with Integral Kenco 1618 Low Flow Meter)
-19	Ingersoll-Rand Rotary
-21	Cooper-Bessemer 2400 Series 6
-24	Ariel JGE (2/4 Throw), JGH (2/4 Throw), JGK (2/4 Throw) and JGT (2/4 Throw) Compressors
-25	Ariel JGU (2/4/6 Throw), JGZ (2/4/6 Throw), KBB (4/6 Throw) and KBV (4/6 Throw) Compressors
-27	Waukesha VHP Engines F2895, F3251, F5108, L5790 & L7042 (Replaces Inspection Door with Two Bolt Mounting Arrangement)
-37	Waukesha P9390 Engine (Replaces Inspection Door)
-38	Waukesha P9390 Engine (Same as -37 except with Integral Kenco 1618 Low Flow Meter)
-39	Waukesha P9390 Engine (Same as -37 except with Integral Kenco 14308 Low Flow Meter)
-40	Waukesha VHP Engines F2895, F3251, F5108, L5790 and L7042 (Same as -17 except with Integral Kenco 14308 Low Flow Meter)
-48A	Ariel JGB (4/6 Throw), JGC (2 Throw), JGD (2 Throw) and JGV (4/6 Throw) Compressors
-48B	Ariel JGC (4/6 Throw) and JGD (4/6 Throw) Compressors with Standard Shaft Rotation and a Single Chain Drive Ariel JGC (6 Throw) and JGD (6 Throw) Compressors with Reverse Shaft Rotation and a Dual Chain Drive
-48C	Ariel JGC (4/6 Throw) and JGD (4/6 Throw) Compressors with Reverse Shaft Rotation and a Single Chain Drive Ariel JGC (6 Throw) and JGD (6 Throw) Compressors with Standard Shaft Rotation and a Dual Chain Drive
-991	Dresser-Rand HOS (4/6 Throw) Compressors
-C33/34*	Caterpillar C3300/3400 Engines
CONTROLLER-TO-CRANKCASE MOUNTING ADAPTERS SPECIFICALLY FOR MODEL K512 CONTROLLERS	
-9U*	Universal Mounting Adapter
-A	Arrow C46, C66, C106 and C245
-AJAX	Ajax, Lufkin Made Before 1-1-63, Superior and Other Crosshead Type Engines, and Tri-Plex Pumps With 1/2" Drains
-FM	Fairbanks Morse ZC, 118, 208, 346, 503, and 739
-L-795	Arrow L-795
-ML	For Side Mounting on Mechanical Lubricator when there is No Extra Pump Pocket
-SML	Mounts on the end of the McCord Mechanical Lubricator next to the Filler Cap
-W*	Witte B,C & F28, F32 & F42
-W98*	Witte 98 with Oil Gauge Bolted to Engine

* Indirect mounted controllers/switches require an equalizing line for proper operation.

FIRE SAFE VALVES™ U.S. Patent # 3,817,353

OPERATING PRINCIPLE

The Fire Safe Oil Control System provides two spring-loaded, thermally actuated valves. In the event of a fire, valves automatically close, stopping the flow of oil from the crankcase of the engine and the reserve oil supply for the controller. Because the Oil Level Controller will melt during a fire, this prevents the addition of oil from the crankcase and the controller's reserve oil supply to the fire.

BENEFITS

- Lower insurance rates
- Protection in case of fire to equipment
- Protection of personnel
- Protection of environment
- Prevents oil supply from feeding a fire

SPECIFICATIONS

Valve Body – Zinc Plated Carbon Steel
Thermal Fuse Melting Temp. – 360°F
Spring – Stainless Steel
Valve Plunger – Carbon Steel
Seal Material – Fluorocarbon
Connection Size: 1/2" FNPT or 3/4" FNPT (other sizes available)

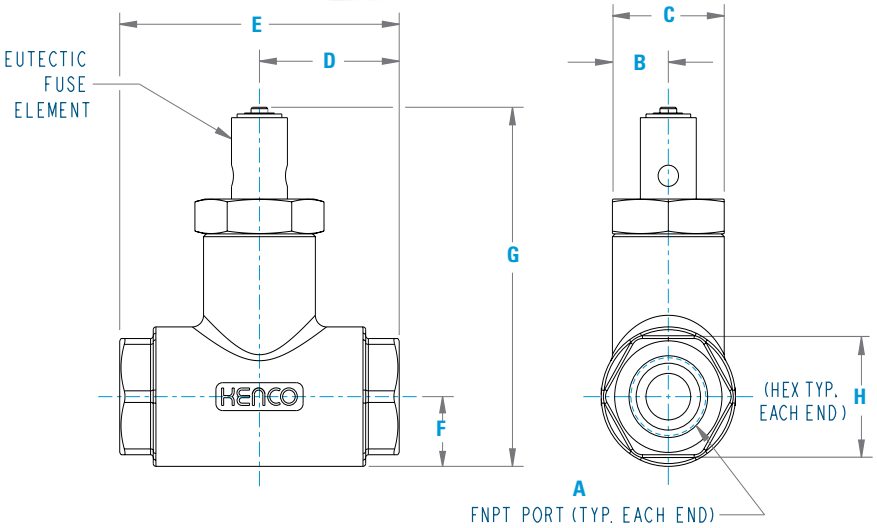

TYPICAL INSTALLATION

Inlet Side:

Install the Model 50-KFS as close to the controller inlet (or Kenco Low Flow Meter) as possible.

Outlet Side:

Install the Model 75-KFS as close to the engine crankcase as possible.

*Note: Flow through valve is bidirectional.

DIMENSIONS

MODEL 50-KFS:	MODEL 75-KFS:
A – 1/2"	A – 3/4"
B – 5/8"	B – 3/4"
C – 1-1/4"	C – 1-1/2"
D – 1-9/16"	D – 1-3/4"
E – 3-1/8"	E – 3-1/2"
F – 3/4"	F – 7/8"
G – 3-7/8"	G – 4-3/8"
H –1-5/16"	H –1-9/16"

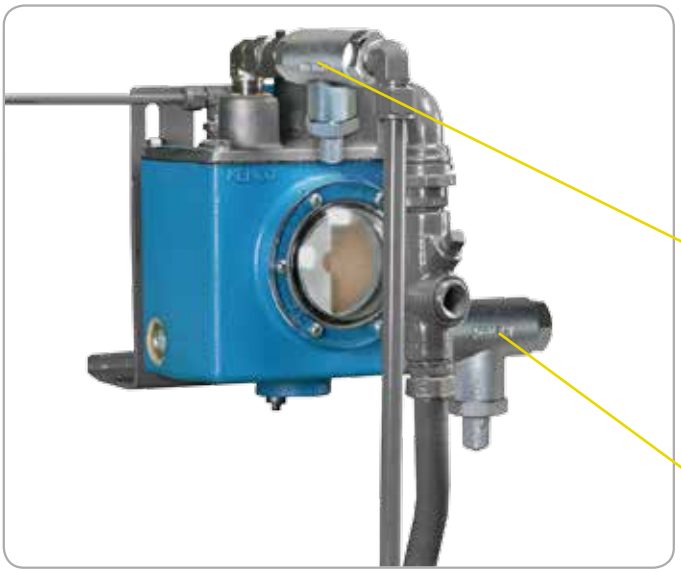

INLET SIDE:
In case of a fire, stops oil from flowing from oil reserve supply.

OUTLET SIDE:
In case of a fire, stops back flow of oil from crank case.

CONTROLLER DESIGNATIONS

MODEL	DESCRIPTION
KLC	Oil Level Controller (No Switch Function)
KLCE	Oil Level Controller with S.P.D.T. Electric Switch in Explosion Proof Enclosure
KLCE-DPDT	Oil Level Controller with D.P.D.T. Electric Switch in Explosion Proof Enclosure
KES	S.P.D.T. Electric Switch in Explosion Proof Enclosure (No Oil Controller Function)
KES-DPDT	D.P.D.T. Electric Switch in Explosion Proof Enclosure (No Oil Controller Function)
KHL	Oil Level Controller with S.P.D.T. Electric Switch in Explosion Proof Enclosure for Single High Level and Low Level Alarm
KHL-DPDT	Oil Level Controller with D.P.D.T. Electric Switch in Explosion Proof Enclosure for Single High Level and Low Level Alarm
KHL-ES	S.P.D.T. Electric Switch in Explosion Proof Enclosure for Single High Level and Low Level Alarm (No Oil Controller Function)
KHL-ES-DPDT	D.P.D.T. Electric Switch in Explosion Proof Enclosure for Single High Level and Low Level Alarm (No Oil Controller Function)
KSHL	Oil Level Controller with Two S.P.D.T. Electric Switches in Explosion Proof Enclosure for Separate High Level and Low Level Alarms
KSHL-ES	Two S.P.D.T. Electric Switches in Explosion Proof Enclosure for Separate High Level and Low Level Alarms (No Oil Controller Function)
KSLL	Oil Level Controller with Two S.P.D.T. Electric Switches in Explosion Proof Enclosure for Two Separate Low Level Alarms
KSLL-ES	Two S.P.D.T. Electric Switches in Explosion Proof Enclosure for Two Separate Low Level Alarms (No Oil Controller Function)
KLCM	Oil Level Controller with S.P.D.T. Electric Switch in CSA Type 4 Enclosure
KLCP	Oil Level Controller with Pneumatic Switch
KPS	Pneumatic Switch (No Oil Controller Function)
K512	Oil Level Controller with Case-To-Ground Switch Contact
K512-TB	Oil Level Controller with Case-To-Ground Switch Contact and Switch Contact Test Button
K512HL	Oil Level Controller with Case-To-Ground Switch Contact for Single High Level and Low Level Alarm
K512HL-TB	Oil Level Controller with Case-To-Ground Switch Contact for Single High Level and Low Level Alarm and Switch Contact Test Button

ORDERING SYSTEM

KLCE — 9 — HPA — FS — V — GW — K

Model

Mounting Adapters (Leave Blank for No Mounting Adapter)
Note: Add "DT" in front of adapter number for housing that is drilled and tapped for a mounting adapter with no mounting adapter is supplied (Example: KLCE-DT9).

Inlet Oil Pressure
(Leave Blank for Static Head Pressures <10 PSIG or Models with No Oil Controller Function)
HPA (10-35 PSIG) – N/A on Models with No Oil Controller Function
HPB (36-70 PSIG) – N/A on Models with No Oil Controller Function

Fire Safe Valves (Leave Blank for No Fire Safe Valves)
FS Supplied with Fire Safe Valves
FSN50 Fire Safe Unit Supplied without 1/2" NPT Fire Safe Valve

Seal Option (Leave Blank for Standard Buna Seals)
V Fluorocarbon Seals

Sight Window Option (Leave Blank for Standard Nylon Sight Window)
GW Glass Window

Hose Kit Option (Leave Blank for No Hose Kit)
K Hose Kit Consisting of 6' of 3/4" I.D. Hose, (2) 1/2" NPT Hose Barbs, (2) 3/4" NPT Hose Barbs, and (4) Hose Clamps.

Synthetic Oil Option
Contact Kenco with the Type and Specific Gravity of synthetic oil being used in the application

Example Order Designation:
KLCE-9-HPA-FS-V-GW-K is an Oil Level Controller with S.P.D.T. Electric Switch in Explosion Proof Enclosure, a Universal Mounting Adapter, a High Pressure Inlet Valve rated for 10-35 PSIG, Fire Safe Valves, Fluorocarbon Seals, Glass Window, and a Hose Kit.

IN-LUBRICATOR OIL LEVEL CONTROLLER WITH SAFETY SWITCH

MODEL K507L

The standard valve seat material is Nitrile, but may be ordered as Fluorocarbon for other types of lubrication. A 1/2" FNPT oil inlet connection and 1/2" FNPT conduit connection is standard. An optional conduit connection wire sealing cap is available for applications with no conduit. The switch is case-to-ground and the circuit will remain open until the oil supply from the outside source is empty.

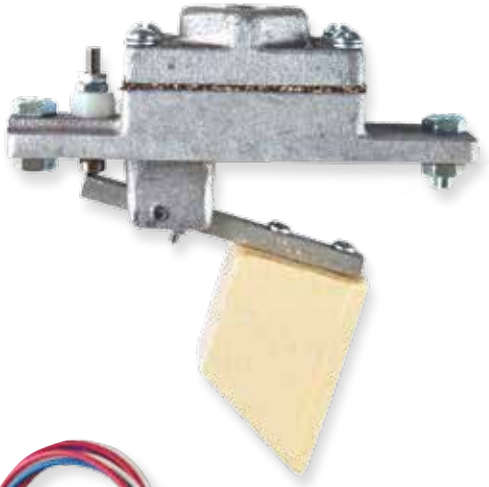

MODEL 507K

The standard valve seat material is a chrome steel ball check. Seal materials are Cork Neoprene and Nitrile. A 1/2" FNPT oil inlet connection is standard. The switch is case-to-ground and the circuit will remain open until the oil supply from the outside source is empty.

MODEL 507M

The standard valve seat material is Nitrile, but may be ordered as Fluorocarbon for other types of lubrication. A 1/2" FNPT oil inlet connection and 1/2" FNPT conduit connection is standard. The switch is S.P.D.T. and can be wired normally open or normally closed.

APPLICATION

Series 507 Oil Level Controllers are designed for use in Lincoln, Premier, and Mega Lubricators.

OPERATING PRINCIPLE

Series 507 Oil Level Controllers automatically monitor and control the amount of oil in the lubricator housing. This keeps all of the working parts including the pump plungers submerged in oil to reduce wear and corrosion. When the level falls below the operational requirement, the low level safety switch will be activated.

FEATURES

- Valve design eliminates lubricator box overfill due to contaminates in the oil
- Controls oil level in lubricator
- Low level safety switch protects against engine and pump repairs due to lubrication failure
- Non-mercury switch will not react to vibration

Model K507L Shown Mounted

MODEL K507L

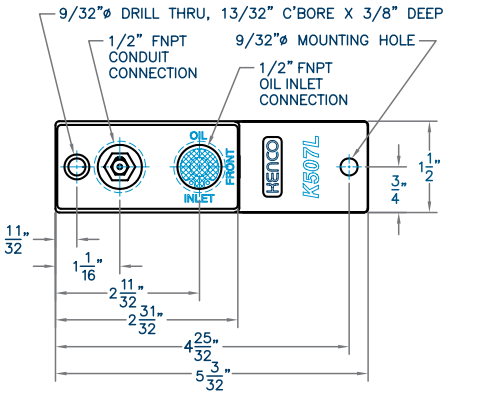

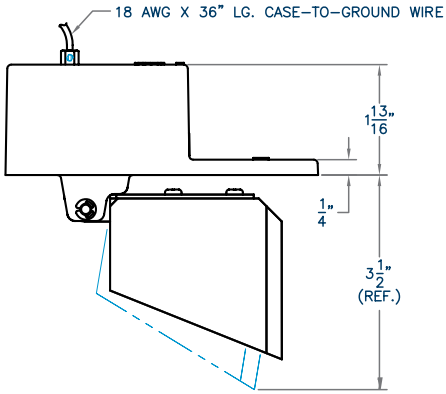

MODEL 507K

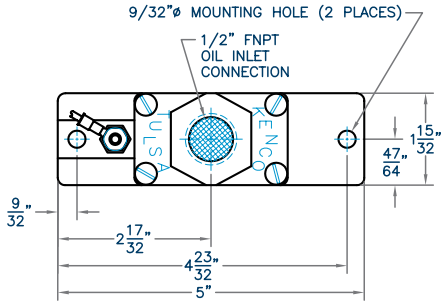

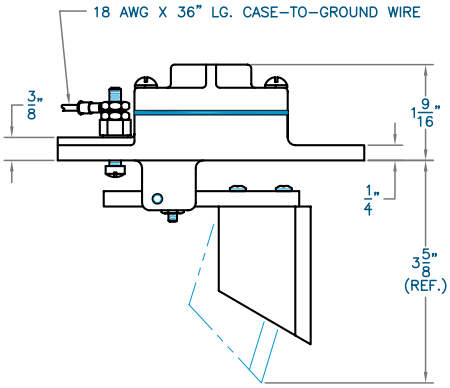

MODEL 507M

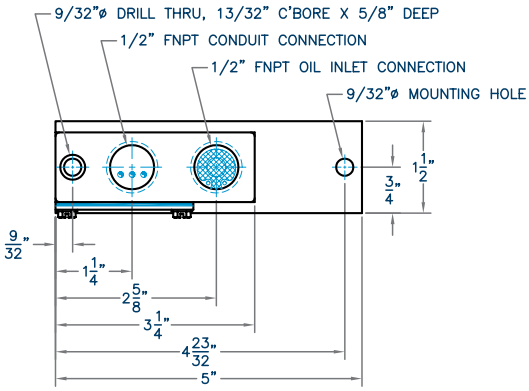

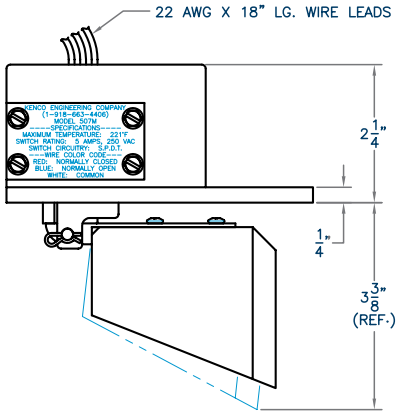

K507L

Materials of Construction:

- Controller Housing: Aluminum
- Valve Seat: Nitrile
- Optional Valve Seat: Fluorocarbon
- Valve Orifice: Aluminum
- Float: Closed Cell Polyurethane
- Oil Inlet Screen: 20 Mesh Brass

Specifications:

- Switch Trip Point: 3/4" drop in oil level
- Switch Rating: 2 amps, 30 VAC or VDC
- Switch Circuitry: Case-To-Ground
- Electrical Connection: 1/2" FNPT conduit connection with 18 AWG x 36" long wire lead.
- Maximum Temperature: 211° F
- Oil Inlet Connection: 1/2" FNPT
- Oil Inlet Pressure using Standard Orifice: 1' to 14' head of oil
- Flow Rate using Standard Orifice tested at 32° F, SAE 30 oil, 2' head: 1.1413 gallons per hour
- Oil Inlet Pressure using Optional High Pressure Orifice: 5 psig to 60 psig
- Flow Rate using Optional High Pressure Orifice tested at 32° F, SAE 30 oil, 5 psig: 0.6425 gallons per hour

Ordering Information:

- Add suffix "-HP" to model number to designate optional "High Pressure" orifice.
- Add suffix "-V" to model number to designate optional "Fluorocarbon" valve seat.
- Optional Conduit Connection Wire Sealing Cap (shown at right) to be ordered as a separate line item.

507K

Materials of Construction:

- Controller Housing: Aluminum
- Valve Seat: Chrome Steel
- Valve Orifice: Aluminum
- Float: Closed Cell Polyurethane
- Oil Inlet Screen: 60 Mesh Brass

Specifications:

- Switch Trip Point: 3/4" drop in oil level
- Switch Rating: 2 amps, 30 VAC or VDC
- Switch Circuitry: Case-To-Ground
- Electrical Connection: 18 AWG x 36" long wire lead
- Maximum Temperature: 211° F
- Oil Inlet Connection: 1/2" FNPT
- Oil Inlet Pressure: 2' to 5' head of oil

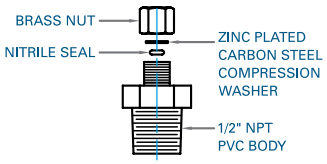

K507L Optional Part:

- 1/2" NPT Conduit Connection Wire Sealing Cap (Kenco Part Number 51006)

507M

Materials of Construction:

- Controller Housing: Aluminum
- Valve Seat: Nitrile
- Optional Valve Seat: Fluorocarbon
- Valve Orifice: Aluminum
- Float: Closed Cell Polyurethane
- Oil Inlet Screen: 20 Mesh Brass

Specifications:

- Switch Trip Point: 3/4" drop in oil level
- Switch Rating: 5 amps, 250 VAC
- Switch Circuitry: SPDT
- Electrical Connection: 1/2"FNPT conduit connection with 22 AWG x 18" long wire leads.
- Wire Color Code:
  - Red: Normally Closed
  - Blue: Normally Open
  - White: Common
- Maximum Temperature: 221° F
- Oil Inlet Connection: 1/2" FNPT
- Oil Inlet Pressure using Standard Orifice: 1' to 14' head of oil
- Flow Rate using Standard Orifice tested at 32° F, SAE 30 oil, 2' head: 1.1413 gallons per hour
- Oil Inlet Pressure using Optional High Pressure Orifice: 5 psig to 60 psig
- Flow Rate using Optional High Pressure Orifice tested at 32°F, SAE 30 oil, 5 psig: 0.6425 gallons per hour

Ordering Information:

- Add suffix "-HP" to model number to designate optional "High Pressure" orifice.
- Add suffix "-V" to model number to designate optional "Fluorocarbon" valve seat and seals.

KENCO NO-FLOW SAFETY SWITCH

APPLICATION

The Kenco NO-FLOW SWITCH ("NFS") is designed to protect the engine and compressor cylinder(s) against lubrication failure.

OPERATING PRINCIPLE

The Kenco "NFS" mounts in line between the lubricator and cylinder. On start up, the first stroke of the lubricator automatically opens the "NFS" switch contact. The contact is opened and closed by the precision-fit plunger inside the "NFS" body. Lubricator oil flows through the body with the rate of flow controlled by the amount of oil that passes between the precision-fit plunger and the bore inside the body. If the lubricator stops pumping, the precision-fit plunger will drift back against the switch contact and stop the engine. The time interval between lubrication failure and shut down can be adjusted by increasing or decreasing the compression on the precision-fit plunger spring.

The "NFS" is available with an overpressure rupture assembly which will instantaneously bleed off and stop the engine in the event the lube line check valve plugs.

SPECIFICATIONS

Switch Contact Electrical Rating: 2 amps, 30 VAC or VDC
Switch Contact Circuitry: Case-To-Ground
Flow Rates Required to Open Switch Contact:
- 6 drops per minute or more when using standard plunger spring
- Between 3 and 6 drops per minute when using optional light plunger spring "L" (See ordering note below)

Maximum Recommended Working Pressures:
- NFS-3, NFS-4, NFS-5, NFS-30: 2,000 psig
- NFS-6, NFS-11: 8,600 psig
- NFS-7, NFS-9, NFS-25: 1,750 psig (Consult factory for other available rupture pressure settings)

MODELS AVAILABLE

NFS-3	Non-explosion proof switch design; no mounting bracket
NFS-4	Non-explosion proof switch design; mounting bracket for Ajax
NFS-5	Non-explosion proof switch design; mounting bracket for large Ajax (3 switches on one bracket)
NFS-6	Explosion proof switch design; no mounting bracket
NFS-7	Non-explosion proof switch design; no mounting bracket; overpressure rupture assembly
NFS-9	Non-explosion proof switch design; mounting bracket for Ajax; overpressure rupture assembly
NFS-11	Explosion proof switch design; no mounting bracket; no inlet or outlet tubing connectors
NFS-25	Explosion proof switch design; no mounting bracket; overpressure rupture assembly
NFS-30	Non-Explosion proof switch design; no mounting bracket; 90° inlet and outlet tubing connectors

Ordering Note: Add "L" to end of model number for light spring option.

TECHNICAL DRAWING - MODEL NFS-6

- Dimensions are for reference purposes only and are subject to change at any time without notice.
- Visit the Kenco website at "www.kenco-eng.com" for drawings of other standard models available.

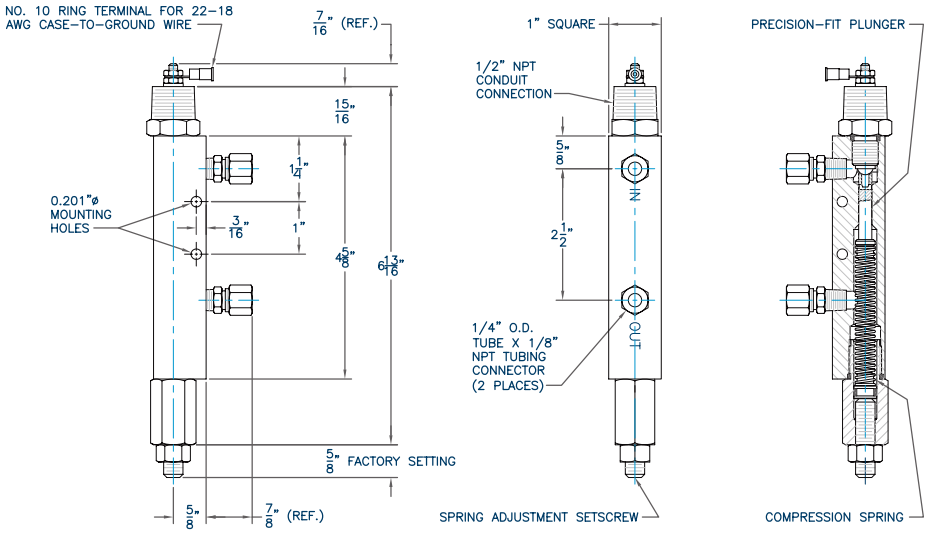

KENCO PROXIMITY SWITCH FOR MECHANICAL LUBRICATOR DIVIDER VALVES

APPLICATION

The Kenco Proximity Switch provides a switch signal used to detect the absence of flow in a continuously operating compressor lubrication system by monitoring cyclic movement of the divider valve piston.

OPERATING PRINCIPLE

The Kenco Proximity Switch assembly's operative components are a reed switch and a magnet that sense the movement of the divider valve piston when it is cycling. It is installed in place of the piston end plug in the divider valve block. When installed, the switch magnet rests against the divider valve piston. The magnet is housed in the switch body parallel to the reed switch. Each time the divider valve pulses with a lubrication cycle, the piston moves the magnet, opening and closing the contacts of the reed switch. The switch contact may be used to complete a circuit to an external unit such as a PLC, an auxiliary counter, indicator or other type of control.

NRTL/C

SPECIFICATIONS

- CSA NRTL/C Certified for Class I, Groups A, B, C, and D; Class II, Groups E, F, and G; Class III, Enclosure Type 4
- Switch Circuitry: S.P.S.T. (Normally Open)
- Maximum Switch Current: 0.5 Amps AC/DC
- Maximum Switch Voltage: 200 Volts AC/DC
- Maximum Switch Power: 10 Watts DC
- Maximum Temperature: 221° F

MODELS AVAILABLE

- 25654-DR = Proximity Switch for Dropsa divider valves
- 25654-ML = Proximity Switch for Modular Lube (Lincoln) divider valves
- 25654-T1 = Proximity Switch with metal gasket seal for Trabon (1994 or earlier) divider valves
- 25654-T2 = Proximity Switch with O-ring seal for Trabon (1995 and later) divider valves

TECHNICAL DRAWING - MODEL 25654-T2

- Dimensions are for reference purposes only and are subject to change at any time without notice.
- Visit the Kenco website at "www.kenco-eng.com" for drawings of other standard models available.

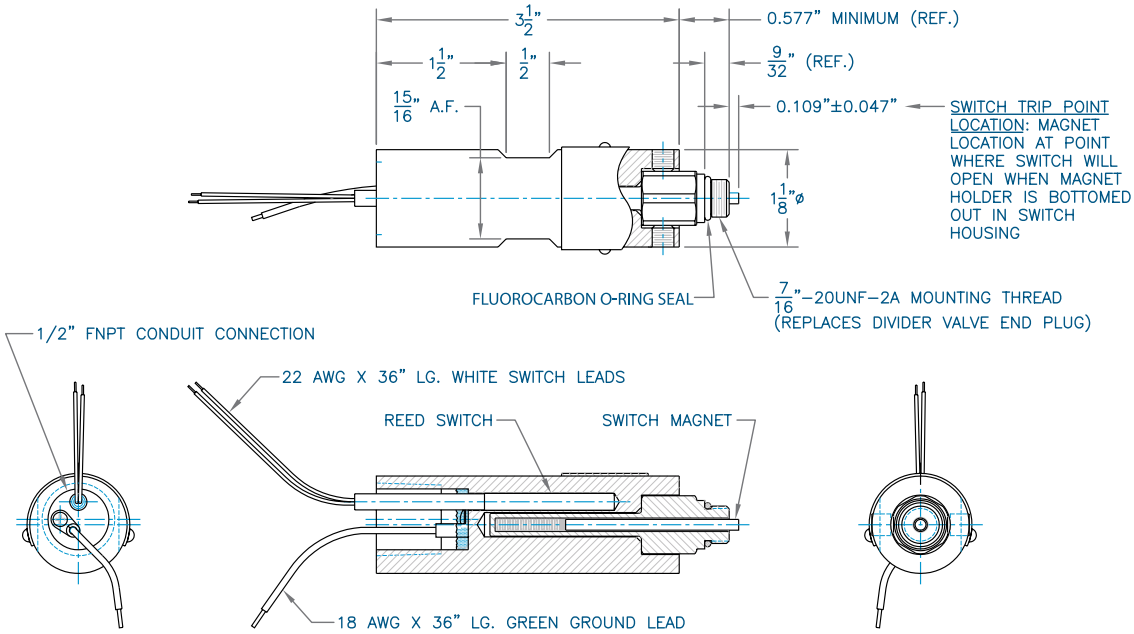

KENCO LOW FLOW METER MODELS 1618 AND 14308

APPLICATION

The Kenco Low Flow Meter provides an accurate record of the amount of lubricating oil required to maintain a constant oil level in the crankcase of an engine or compressor. This meter has been used in gas and oil transmission services for many years.

OPERATING PRINCIPLE

The Kenco Low Flow Meter is a positive displacement double action, single piston meter. The piston strokes and actuates a mechanical counter that registers the amount of oil flowing through the meter. Each piston stroke equals and registers 0.01 gallon of flow. There are two models available. The model 1618 with a mechanical counter only and the model 14308 with a mechanical counter and a reed switch. The 14308 reed switch is actuated by a magnet mounted onto the surface of the piston. The switch closes every other piston stroke thus completing a circuit every 0.02 gallon. The mechanical counter is immersed in oil assuring maximum wear resistance from vibration. The meter is installed in line between a Kenco oil storage tank and a Kenco oil level controller. The orientation of the meter does not matter as long as all the air is purged out.

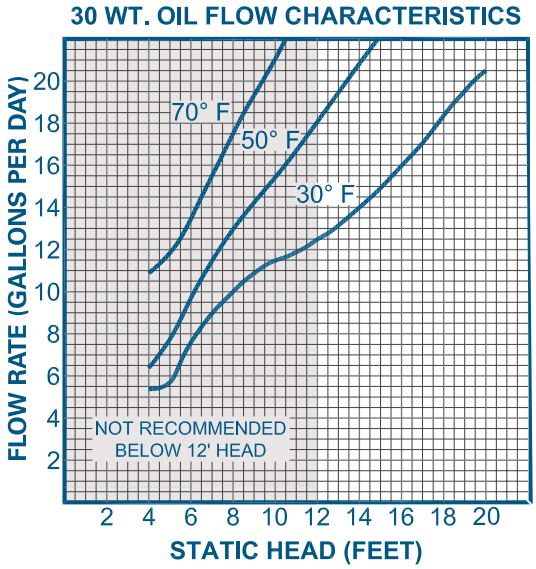

COMMON SPECIFICATIONS FOR MODELS 1618 AND 14308

- Flow Rate Range: 0.05 to 5 gallons per hour
- Working Pressure Range: 4.6 to 50 psig
- Mechanical Counter Range: 9999.99 gallons
- Mechanical Counter Resolution: 0.01 gallon

SWITCH SPECIFICATIONS FOR MODEL 14308 ONLY

- Type: Hermetically Sealed Reed
- Circuitry: S.P.S.T. Normally Open
- Contact Resolution: 0.02 gallon
- Maximum Voltage: 100 VDC; 140 VAC
- Maximum Current: 0.25 Amps DC; 0.18 Amps AC
- Maximum Power: 7 Watts

TECHNICAL DRAWING

- Switch conduit connection and 22 AWG switch leads are applicable to model 14308 only.
- Dimensions are for reference purposes only and are subject to change at any time without notice.

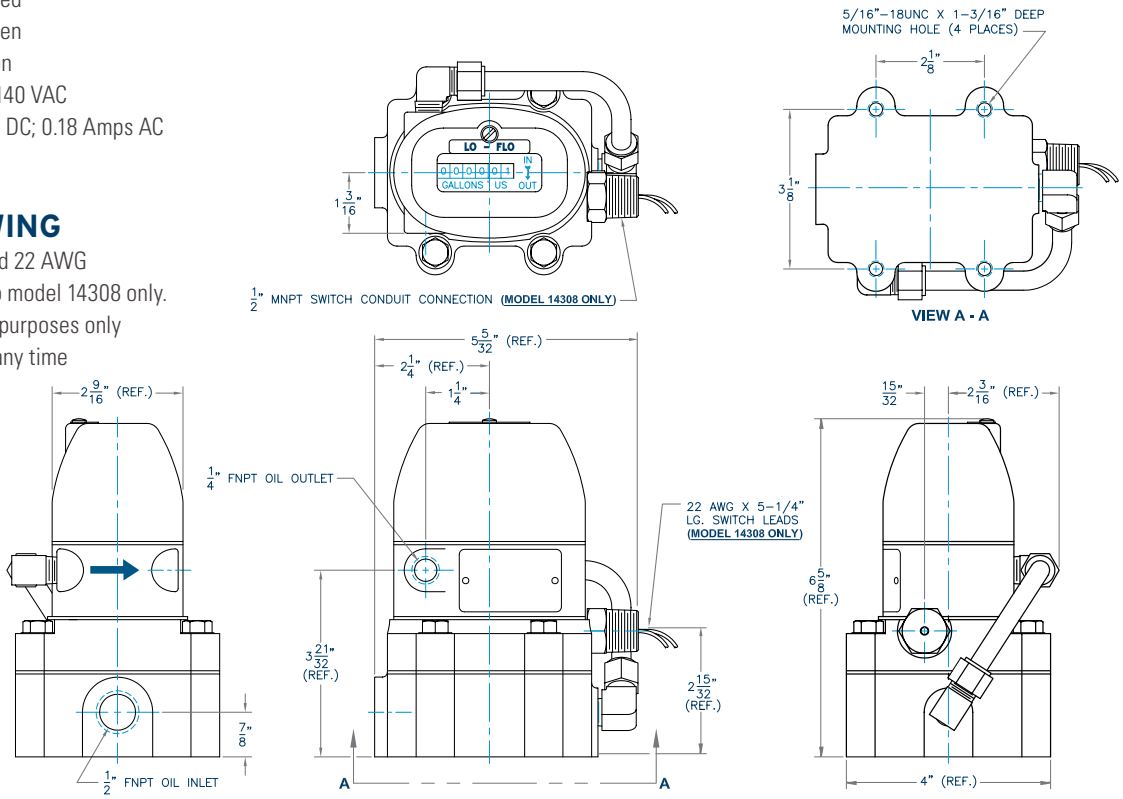

Represented by:

Kenco Sales Offices:

Headquarters
10001 E. 54th St.
Tulsa, OK 74146
phone 918.663.4406
fax 918.663.4480
www.kenco-eng.com
email: info@kenco-eng.com

Baton Rouge Office
11616 Industriplex, Suite 7
Baton Rouge, LA 70809
phone 225.755.1912
fax 225.755.1913
www.kenco-eng.com
email: kenco-la@kenco-eng.com

12-19-12

KENCO® ENGINEERING